Industrial Ethernet Surge Suppressor
– 60V protection on all Ethernet lines
Model BB-EIRSP1

ADVANTECH

www.advantech.com

PRODUCT FEATURES

- Single-stage surge protection for all eight Cat5e lines
- 10/100 BaseT Ethernet, RJ45 connectors
- Wide operating temperature (-40 to +80 °C)
- DIN rail mount IP30 enclosure
- Power-over-Ethernet (PoE) compatible
- UL Listed

Model BB-EIRSP1, Industrial Ethernet Surge Suppressor, is designed to protect all eight lines of a standard Cat5e Ethernet cable. It is compatible with 10/100BaseT networks and 802.11af (Modes A & B) Power-over-Ethernet ("PoE"). Mode A applies power to the data pairs, pins 1/2 and 3/6. Mode B applies power to the unused pairs, pins 4/5 and 7/8.

Network connections are made using RJ-45 connectors. Grounding is accomplished using a ground lug which accepts 14 to 22 AWG wire. Stranded or braided cable is recommended with a 1 meter (3 ft) maximum run to Earth Ground.

MECHANICAL DRAWING

Units = inches

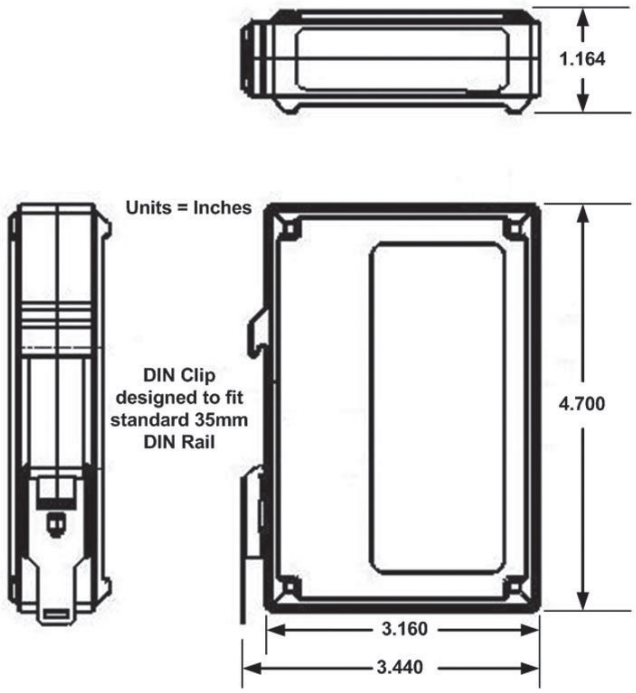

ORDERING INFORMATION

MODEL NUMBER	
BB-EIRSP1	Industrial Ethernet Surge Suppressor, Single Stage

SPECIFICATIONS

NETWORK	
Ethernet Connector	RJ45 (In and Out)
Protocols	PoE 802.11af (Power-over-Ethernet) (Modes A & B)
Speed	10/100 BaseT
SURGE PROTECTION	
Lines Protected	All eight (8) RJ45 (CAT5)
Clamping Voltage	60V
Peak Pulse Power	600 W
Peak Surge Current	1000 Amps
Capacitance	<50 pF
ENVIRONMENTAL	
Response Time	<5 ns
Operating Temperature	-40 to +80 °C (-40 to +176 °F)
Storage Temperature	-40 to +85 °C (-40 to +185 °F)
Operating Humidity	0 to 95%, non-condensing
PHYSICAL	
Enclosure	Plastic, IP30
Mounting	DIN Rail
Dimensions	3.0 x 11.9 x 8.6 cm (1.2 x 4.7 x 3.4 in)
WIRING	
Wire Type	Copper wire only. One conductor per terminal.
Wire Range	14 to 22 AWG
Tightening Torque	1.7 lb-in
Wire Temperature Rating	105 °C, max. (sized for 60 °C ampacity)
MEANTIME BETWEEN FAILURE (MTBF)	
MTBF	131960 hours
MTBF Calc. Method	MIL117F Parts Count Reliability Prediction
CERTIFICATIONS	
CE, FCC, UL Listed	
2011/65/EU	Reduction of Hazardous Substance (RoHS) Directive

All product specifications are subject to change without notice.
BB-EIRSP1_pn8440_r1_4019ds

ADVANTECH Advantech B+B SmartWorx, 707 Dayton Road, PO Box 1040 Ottawa, IL 61350 USA **1 (800)346-3119**/Toll Free | *orders@advantech-bb.com* | *support@advantech-bb.com*