CONFIG PART #	
910ENT3248-FK	910EN3248-FK
EN FRAME 91"H x 32"W x 48"D WITH 2 PAIR OF 45 RMU #10-32 TAPPED RAILS, CABLE MANAGMENT FINGERS ON ALL RAILS	EN FRAME 91"H x 32"W x 48"D WITH 2 PAIR OF 45 RMU M6 RAILS, CABLE MANAGMENT FINGERS ON ALL RAILS

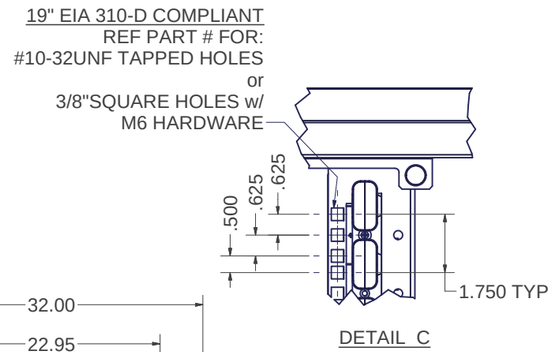

DETAIL C

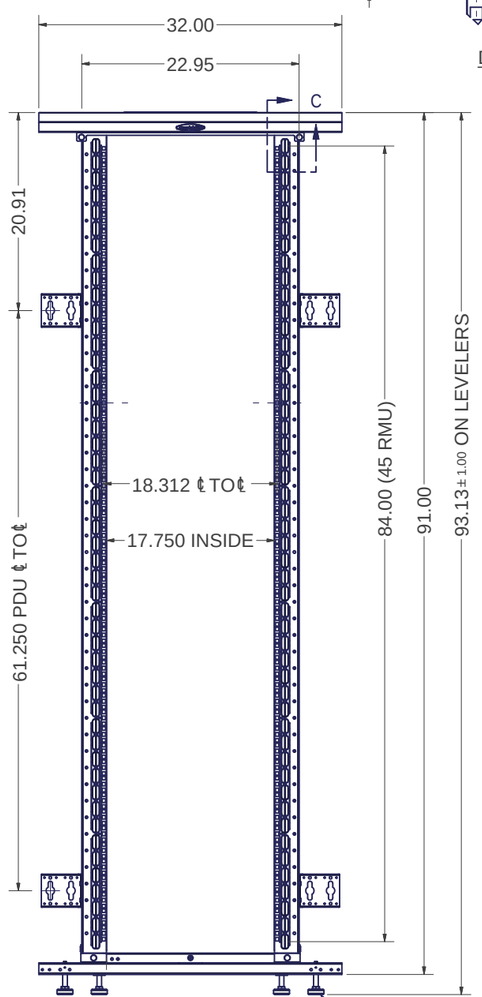

FRONT VIEW

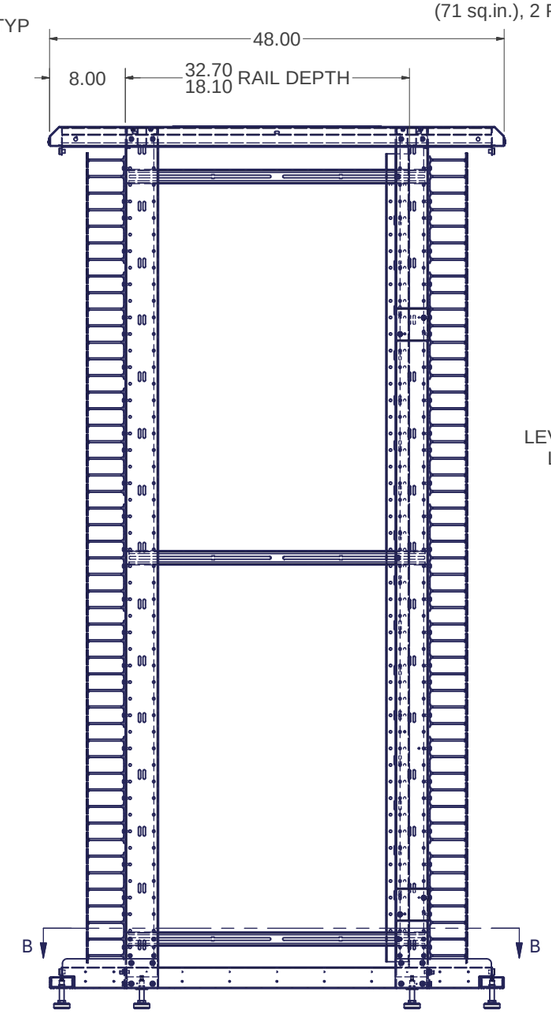

RIGHT SIDE VIEW

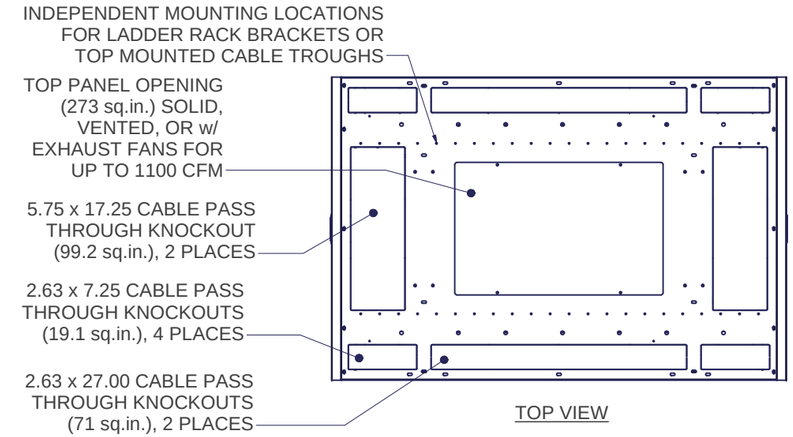

TOP VIEW

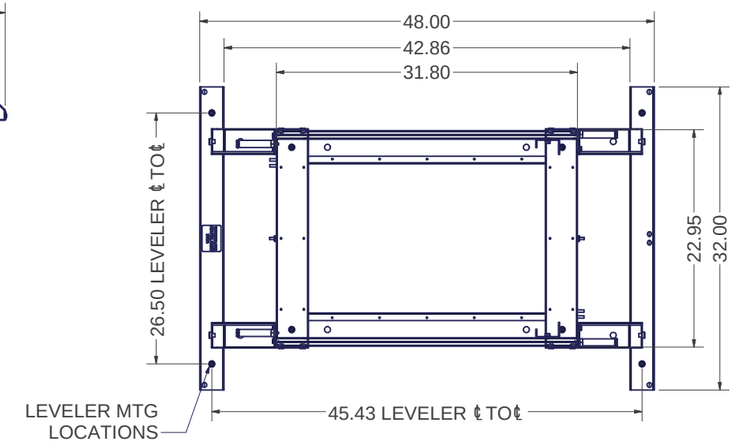

SECTION B-B

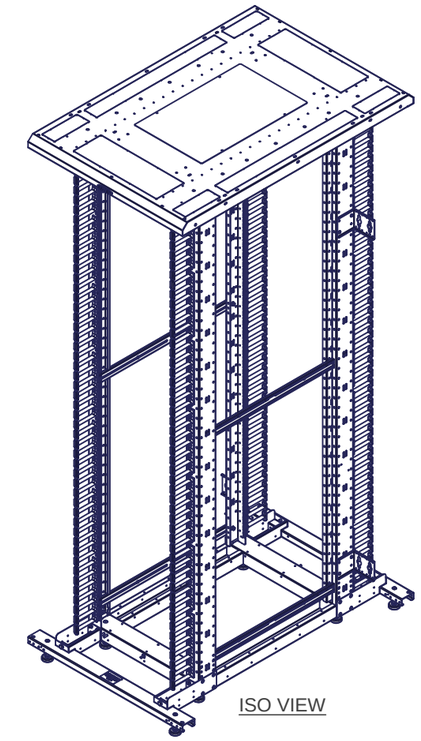

ISO VIEW

SPECIFICATIONS:

CONFIG. # KIT INCLUDES: QTY(1) 9101ENX3248, BASE FRAME UNIT WITH RAILS

DIMENSIONS : 91.0"H x 32.0"W x 48.0"D

RACK SPACES : 48 RMU w/ NUMBERED RMU INDICATORS, 19" EIA 310-D COMPLIANT.

COLOR : DURABLE TEXTURED BLACK POWDER COATING

CONSTRUCTION : FULL WELDED FRAME WITH RECESSED #12 GA CORNER POSTS, 1 PAIR FIXED #12 GA RAILS, 1 PAIR ADJUSTABLE DEPTH #12 GA RAILS, & CRS SOLID TOP PANEL

HARDWARE : PACKAGE OF QTY-50; #10-32 SCREWS -OR- M6 SCREWS W/ CAGE NUTS, INCLUDED.

EST. WEIGHT : 254.83 lbmass

THIRD ANGLE PROJECTION

INTERPRET DRAWING PER ASME Y14.5M-1994
DIMENSIONAL LIMITS APPLY AFTER APPLICATION OF FINISH
DRAWING NOT TO SCALE
TOLERANCE UNLESS OTHERWISE NOTED:
ANGULAR +/- 1°
.XXXX +/- .010
.XXX +/- .015
.XX +/- .030
.X FOR REF. ONLY
UNLESS OTHERWISE SPECIFIED ALL DIMENSIONS ARE IN INCHES

NOTICE:
Use of this document is subject to a confidentiality and nondisclosure agreement with Great Lakes Case & Cabinet Co., Inc. (GLCC) and may not be reproduced, disclosed or utilized in whole or in part without prior written authorization from GLCC.

PART NUMBER: 910EN3248-FK
QTY PER UNIT: 1
MATERIAL TYPE: -
MATERIAL GAUGE: -
FINISH: -
DRAWN: FED DATE: 5/19/2014
CHECKED & APP.: WSS DATE: 5/19/2014

TITLE: **EN ENCLOSURE FRAME KIT, 91"H x 32"W x 48"D w/ SOLID TOP & 48 RU RAILS**

GREAT LAKES CASE & CABINET CO., INC.
P.O. BOX 551 EDINBORO, PA 16412
PHONE (814) 734-7303 FAX (814) 734-3907
E-MAIL glcc@greatcabinets.com

DWG NO: SEE CHART
REV
SHEET: 1 OF 1