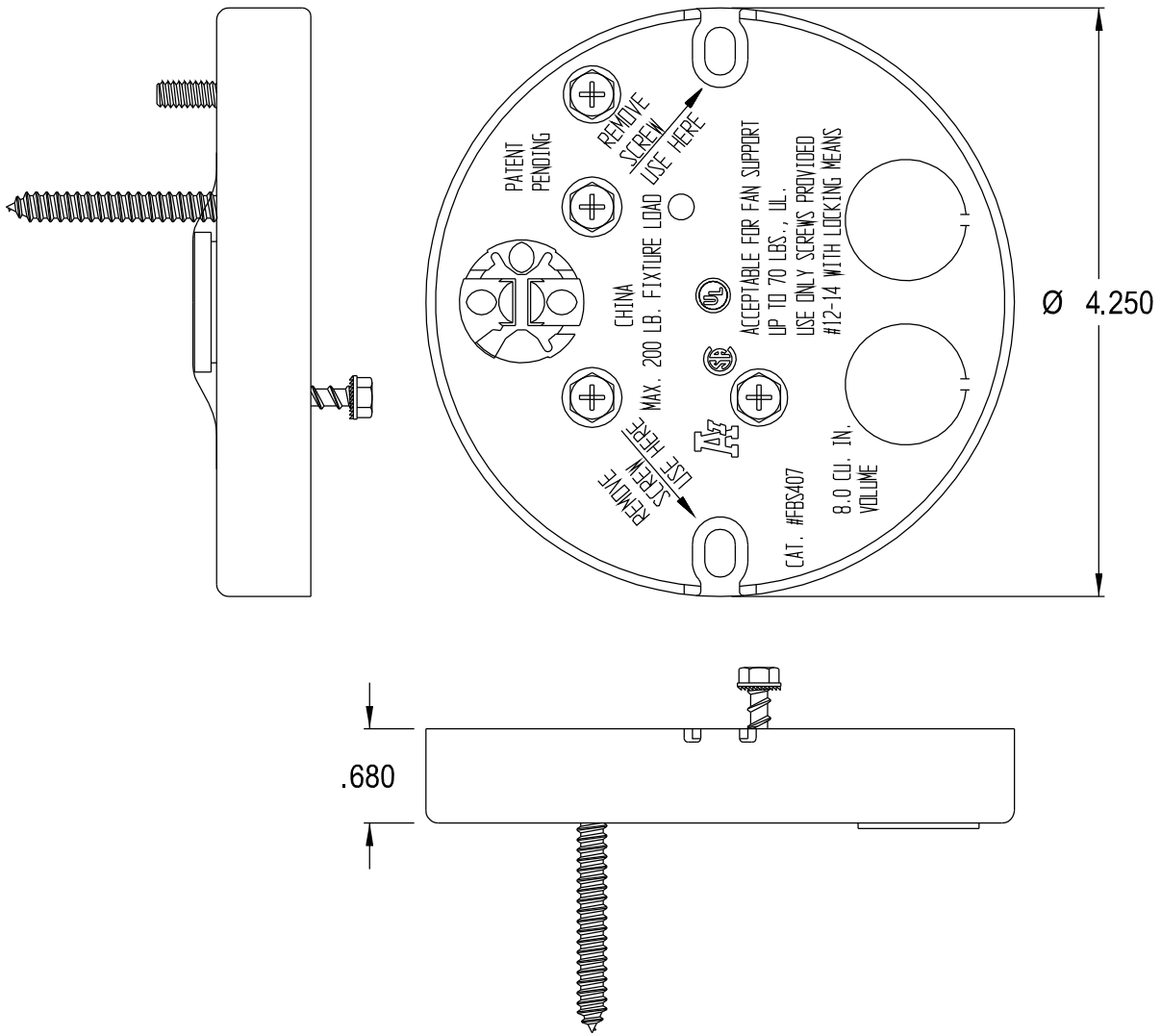
PATENT PENDING
REMOVE SCREW
USE HERE
CHINA
MAX. 200 LB. FIXTURE LOAD
ACCEPTABLE FOR FAN SUPPORT
UP TO 70 LBS., UL.
USE ONLY SCREWS PROVIDED
#12-14 WITH LOCKING MEANS
REMOVE SCREW
USE HERE
CAT. #FBS407
8.0 CU. IN.
VOLUME
Ø 4.250
.680