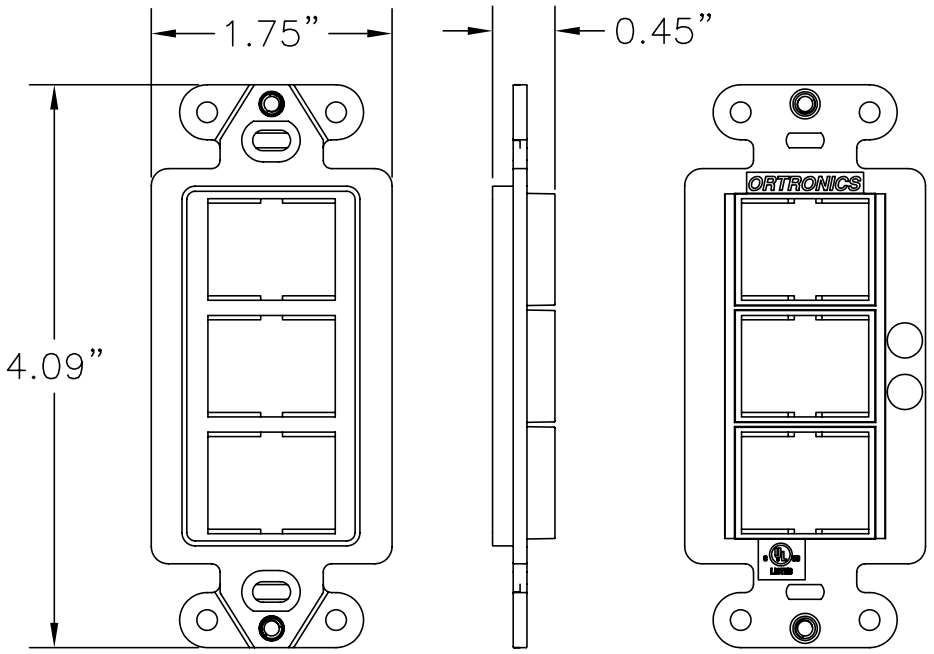

2x #6-32 x 1” BINDING HEAD SCREW

DRW. NO.	COLOR
41900017-13	IVORY
41900017-41	BROWN
41900017-88	CLOUD WHITE

*** NOTICE ***
THIS DOCUMENT CONTAINS CONFIDENTIAL AND/OR PROPRIETARY INFORMATION INTENDED FOR USE ONLY BY THE INDIVIDUAL(S) SPECIFIED HEREIN AND ONLY FOR THE PURPOSE(S) PROVIDED. NEITHER THIS DOCUMENT, NOR ANY INFORMATION CONTAINED HEREIN, MAY BE COPIED, DISTRIBUTED, DISCLOSED TO ANY THIRD PARTY OR USED IN ANY MANNER OTHER THAN FOR WHICH IT HAS BEEN PROVIDED, WITHOUT THE PRIOR WRITTEN CONSENT OF ORTRONICS, INC.

ORTRONICS®
NEW LONDON, CT 06320
(860) 445-3800

DWN.BY: W. DIETZ	DATE 11/08/06	
CHK.BY: C.A.COLLELO	08/20/07	
APP.BY: M. MARTICH	08/21/07	

TITLE: 3 PORT TRACJACK STRAP RECEPTACLE, STYLISTICS SCREW, KIT

SIZE	CAD FILE	PART NUMBER	REV
A	41900017XXC	OR-41900017-XX	04

SCALE	REL DATE	SHEET
NONE	03/23/09	1 OF 1