DATA SHEET

24-Fiber M4 Cassette with 24 LC Quad Adapters to 2 MPO (M), Method B

Infinium M4 cassettes are pre-terminated cassettes designed to breakout rear MPO connections with method B flipped polarity to LC connections on the front.

OVERVIEW

Infinium M4 pre-terminated cassettes with method B provide rapid deployment and have a flipped polarity inside the modules, which use key-up to key-up MPO adapters and allows for straight through patching. The rugged metal housing offers additional durability and includes a built-in internal bend limiting feature to assure optimum optical performance.

FEATURES

- **Method B connectivity:** Has flipped polarity and uses key-up to key-up adapters
- **Pre-terminated solution:** For fastest installation, highest performance and consistent factory quality
- **Fiber port labeling:** Provides easier administration

ITEM DESCRIPTION

M4LCQ24-09C1A1	24-Fiber OS2 M4 Cassette with 24 LC Quad Adapters to 2 MPO (M), Tier 1, Method B, Near End
M4LCQ24-09C1B1	24-Fiber OS2 M4 Cassette with 24 LC Quad Adapters to 2 MPO (M), Tier 1, Method B, Far End
M4LCQ24-50EC2A1	24-Fiber OM4+ M4 Cassette with 24 LC Quad Adapters to 2 MPO (M), Tier 2, Method B, Near End
M4LCQ24-50EC2B1	24-Fiber OM4+ M4 Cassette with 24 LC Quad Adapters to 2 MPO (M), Tier 2, Method B, Far End
M4LCQ24-50EC3A1	24-Fiber OM4+ M4 Cassette with 24 LC Quad Adapters to 2 MPO (M), Tier 3, Method B, Near End
M4LCQ24-50EC3B1	24-Fiber OM4+ M4 Cassette with 24 LC Quad Adapters to 2 MPO (M), Tier 3, Method B, Far End

AGENCIES/THIRD PARTY CERTIFICATIONS

- RoHS: Yes

DATA SHEET

SPECIFICATIONS:

24-Fiber M4 Cassette with 24 LC Quad Adapters to 2 MPO (M), Method B

GENERAL INFO:

- Color: M4LCQ24-09C1A1 - Blue
  M4LCQ24-09C1B1 - Blue
  M4LCQ24-50EC2A1 - Aqua
  M4LCQ24-50EC2B1 - Aqua
  M4LCQ24-50EC3A1 - Aqua
  M4LCQ24-50EC3B1 - Aqua
- Number Of Ports: 24
- Typical Applications:
  M4LCQ24-09C1A1 - Single-mode
  M4LCQ24-09C1B1 - Single-mode
  M4LCQ24-50EC2A1 - Multimode
  M4LCQ24-50EC2B1 - Multimode
  M4LCQ24-50EC3A1 - Multimode
  M4LCQ24-50EC3B1 - Multimode
- Connection Type: MPO-LC
- Installation Destination: Fiber Cabinets
- Product Series: Infinium

DIMENSIONS:

- Depth (Metric): 120.90 mm
- Depth (US): 4.76"
- Height (Metric): 28.96 mm
- Height (US): 1.14"
- Width (Metric): 87.63 mm
- Width (US): 3.45"
- Rack Units: 0.6

TECHNICAL INFORMATION:

- Connection Method: Method B
- Fiber Capacity: 24
- Max Insertion Loss:
  M4LCQ24-09C1A1 - 1.05 dB
  M4LCQ24-09C1B1 - 1.05 dB
  M4LCQ24-50EC2A1 - 0.75 dB
  M4LCQ24-50EC2B1 - 0.75 dB
  M4LCQ24-50EC3A1 - 0.50 dB
  M4LCQ24-50EC3B1 - 0.50 dB
- Max Return Loss:
  M4LCQ24-09C1A1 - 52.0 dB
  M4LCQ24-09C1B1 - 52.0 dB
  M4LCQ24-50EC2A1 - 19.0 dB
  M4LCQ24-50EC2B1 - 19.0 dB
  M4LCQ24-50EC3A1 - 19.0 dB
  M4LCQ24-50EC3B1 - 19.0 dB
- Capacity: High Density
- Equipment Type: Pre-Terminated Cassettes

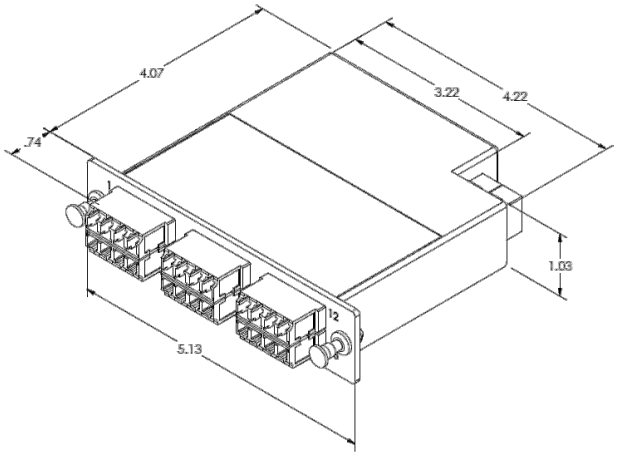

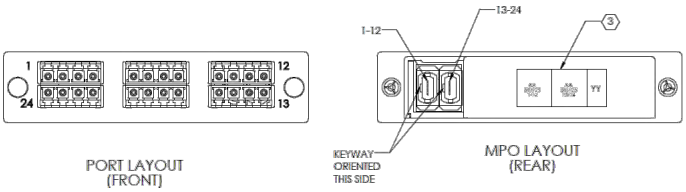

© 2018 Legrand All Rights Reserved rev.03/18 Data Sheet – M4LCQ24-09C1A1_M4LCQ24-09C1B1_M4LCQ24-50EC2A1_M4LCQ24-50EC2B1_M4LCQ24-50EC3A1_M4LCQ24-50EC3B1

Legrand, North and Central America

60 Woodlawn Street
West Hartford, CT 06110
1.877.BY.LEGRAND (295.3472)
www.legrand.us