DRAWING NO.
SE206158

REV	DATE	DESCRIPTION	ECO	BY	C'H'K.
A	7/10/2009 12:00:00 AM	REDRAW IN PROE	18319	MB	BSK

** TABLE 1 **

CATALOG NUMBER	ACCOMMODATES I.P.S.	ACCOMMODATES O.D. SIZE	H	J	W	RECOMMENDED TIGHTENING TORQUE
GAR3902TC	1/2"-1"	.840-1.32 [21-34]	3.50 [89]	3/8"-16" [N/A]	3.75 [95]	240 IN*LBS [27.1 N*m]
GAR3903TC	1-1/4"-2"	1.66-2.38 [43-61]	4.00 [102]		4.75 [121]	
GAR3904TC	2-1/2"-3-1/2"	2.88-4.00 [73-102]	6.50 [165]		6.50 [165]	
GAR3905TC	4"-5"	4.50-5.56 [114-141]	7.50 [191]		8.00 [203]	
GAR3906TC	6"	6.62 [168]	8.50 [216]		9.50 [241]	

** TABLE 2 **

CONNECTOR TERMINAL GUIDE			INSTALLATION GUIDE TOOLS AND DIES											
					T AND B		BURNDY							
GROUND CONDUCTOR (CODE)		CATALOG NO.	BURNDY DIE INDEX	COLOR CODE	DIE CODES		HYPRESS TOOLS, DIES, (*)CRIMPS							
AWG	METRIC WIRE SIZE	◁1			15 TON TBM 15	12 TON TBM 12	Y750 Y35 Y39	*	Y45 ◁2	*	Y46 ◁3	*	DIELESS	*
#10-14	$4mm^2$ STR-$2.5mm^2$	YAV102TC38	-	-	-	-	-	-	-	-	-	-	Y8HR8-1	1
#8SOL/STR	---	YA8CL2TC38	49	RED	21	21	U8CRT	1	U8CRT	1	U8CRT	1	Y8HR8-1	1
#6 STR	---	YA6CL2TC38	7	BLUE	24	24	U5CRT	1	U5CRT	1	U5CRT	1	HYPRESS Y644M 1-CRIMP	
#4 STR	---	YA4CL2TC38	8	GRAY	29	29	U4CRT	1	U4CRT	1	U4CRT	1		
#3 STR / 2 SOL	$35mm^2$ STR	YA3CL2TC38	9	WHITE	-	-	U3CRT	1	U3CRT	1	U3CRT	1		
#2 STR	$35mm^2$ STR	YA2CL2TC38	10	BROWN	33	33	U2CRT	1	U2CRT	1	U2CRT	1		
#1 STR	---	YA1CL2TC38	11	GREEN	37	37	U1CRT	1	U1CRT	1	U1CRT	1		
1/0 STR	---	YA25L2TC38	12	PINK	42H	42	U25RT	1	U25RT	1	U25RT	1		
2/0 STR	$70mm^2$ STR	YA26L2TC38	13	BLACK	45	45	U26RT	1	U26RT	1	U26RT	1		
3/0 STR	---	YA27L2TC38	14	ORANGE	50	50	U27RT	1	U27RT	1	U27RT	1		
4/0 STR	---	YA28L2TC38	15	PURPLE	54H	54	U28RT	1	U28RT	1	U28RT	1		
250 Kcmil	---	YA29L2TC38	16	YELLOW	62	32	U29RT	1	U29RT	1	U29RT	1		
300 Kcmil	$150mm^2$ STR	YA30L2TC38	17	WHITE	66	66H	U30RT	2	U30RT	2	U30RT	2		
350 Kcmil	$185mm^2$ STR	YA31L2TC38	18	RED	71H	71H	U31RT	2	U31RT	2	U31RT	2		
400 Kcmil	---	YA32L2TC38	19	BLUE	76	76H	U32RT	2	U32RT	2	U32RT	2		
500 Kcmil	---	YA34L2TC38	20	BROWN	87H	87H	U34RT	2	U34RT	2	U34RT	2		
600 Kcmil	$300mm^2$ STR	YA36L2TC38	22	GREEN	94H	94H	U39RT	2	U39RT	2	U39RT	2		
700 Kcmil	---	YA38L2TC38	400	PINK	99H	99H	U38RT	2	U38RT	2	U38RT	2		
750 Kcmil	$400mm^2$ STR	YA39L2TC38	24	BLACK	106H	106H	U39RT	2	U39RT	2	U39RT	2		

NOTES:

1. BURNDY® TYPE YA-2TC38, YA-L-2TC38 AND YAV-L-2TC38-FX. ALL -FX, -45, -90 VARIATIONS. (YA39L-2NT38 MAX. SIZE ACCOMMODATED)
2. USE CATALOG NO. PT6515 ADAPTER WHEN USING "U" DIES IN Y45 TOOL.
3. USE CATALOG NO. P-UADP-1 ADAPTER WHEN "U" DIES IN Y46 TOOL.
4. PREPARE PIPE SURFACE TO VIRGIN METAL SHINE UNDER BRASS SADDLE CONTACT AREA. APPLY CLAMP SADDLE TO SHINING METAL SURFACE TIGHTENING TORQUE 240 [N*LBS. [27.1 Nm] SEAL SADDLE PERIMETER BY APPLYING OXIDE INHIBITING COMPOUND, BURNDY PEN-E OR EQUIVALENT.
5. DURIUM (SILICON BRONZE) HARDWARE KIT (CAT# TMH289). (ORDER SEPARATELY) INCL: (1) 38x125 HEB
   (1) 38 CHEN
   (1) 38 SW
   (2) 38 FW
6. ADD SUFFIX-TNET TO OBTAIN TIN PLATED CONNECTOR (EX. GAR3903-TC-TNET). THESE CONNECTORS INCLUDE TIN PLATED HARDWARE KITS FOR MOUNTING TERMINALS. EXTRA KITS MAY BE ORDERED BY CAT. NO. TMH289ET.
7. IF HIGHEST REVISION OF THIS SALES PRINT IS AFFECTED, UPDATE PRINT WSA208758 TO INCLUDE THE NEW REVISION.
8. DIMENSIONS IN BRACKETS [] ARE IN MILLIMETERS ROUNDED OFF TO THE NEAREST MILLIMETER, UNLESS OTHERWISE NOTED AND ARE FOR REFERENCE ONLY.
9. UL 467 LISTED, FILE NO. E9999. ACCEPTABLE FOR DIRECT BURIAL.

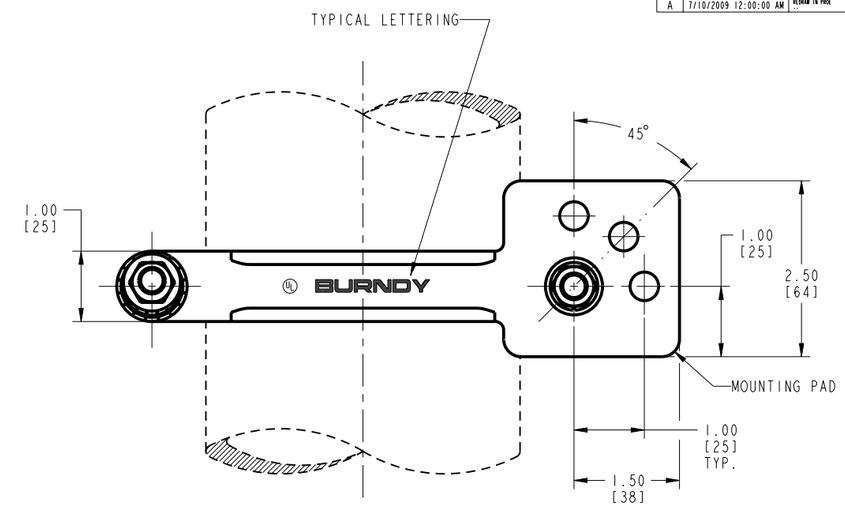

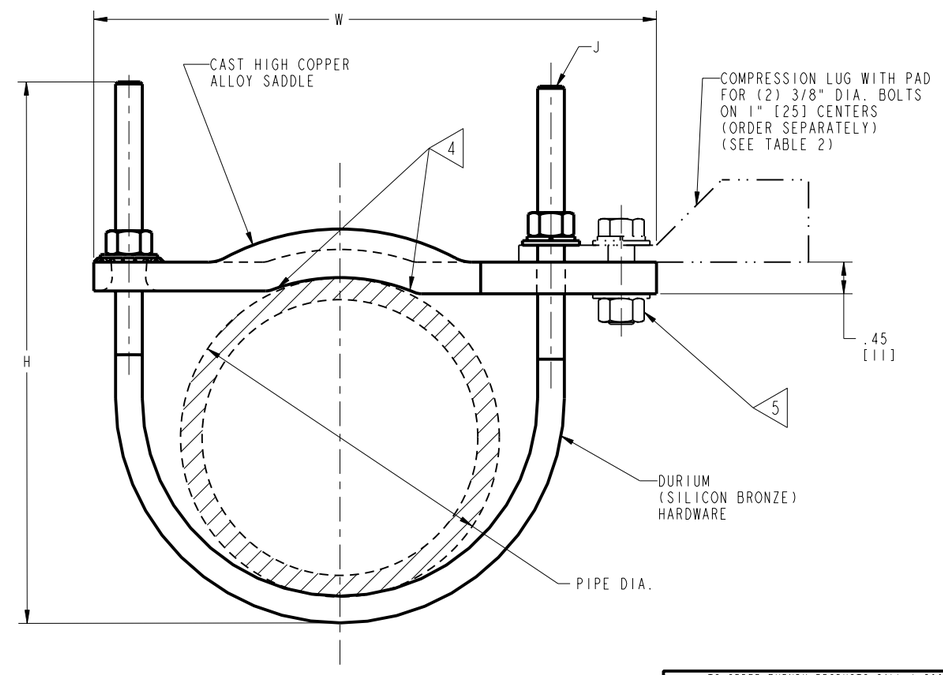

TO ORDER BURNDY PRODUCTS CALL 1-800-346-4175
MANCHESTER, NH 03109, USA
FOR PRODUCT INFO = http://www.fciconnect.com

GROUND CLAMP

ITEM NO:	--	
CAT. NO:	GARTC (SEE TABLE)	
DRAWN BY:	MP	11/15/90
CHECKER:	ATM	12/05/90
DSN APPVL:	KW	12/04/90
MFG APPVL:	--	--
QA APPVL:	AL	12/05/90
MKT APPVL:	T.M.	03/21/91
SCALE: 1:1		
PROD FAM: SUBSTATION		
PROJECT #: --		
DOCUMENT TYPE: Sales		
REL LEVEL: Released		
SIZE	D	
DRAWING NO	SE206158	
SHEET 1 OF 1		
REV	A	

REV: PE0200