SIEMENS

Data sheet 3VA2063-5KP32-0CA0

Circuit breaker 3VA2 IEC Frame 100 Switching capacity class M Icu=55 kA @ 415 V 3-pole, system protection ETU850, LSI, In=63 A Overload protection Ir=25 A...63 A short-circuit protection Isd=0,6..10x In, Ii=1.5..12x In N-conductor protection optionally with external current transformer Lug terminal Undervoltage release (UVR) 120-127V AC 50/60Hz

Model	
Product brand name	SENTRON
Product designation	Molded case circuit breaker
Design of the product	Line protection
Design of the overcurrent release	ETU850
Protective function of the overcurrent release	LSI
Number of poles	3
Design of the auxiliary release	Undervoltage release (UVR)
Design of the auxiliary switch	Without

General technical data	
Tension assignée d'isolement Ui	800 V
Max. rated operational voltage Ue with AC 50/60Hz	690 V
Active power loss / for rated value of the current / at AC / in hot operating state / per device	7.9 W
Mechanical service life (switching cycles) / typical	20 000
Electrical endurance (switching cycles) / at AC-1 / at 380/415 V 50/60 Hz	12 000
Neutral conductors / upgradeable/retrofittable	Yes
Ground fault monitoring version	Without

Subject to change without notice
© Copyright Siemens

Product function	
• communication function	Yes
• Phase failure detection	No
• other measurement function	Yes
Net weight	2.42 kg

Electricity	
Max. rated operational voltage of the size of the circuit-breaker	100 A
Courant permanent assigné Iu	63 A
Operating current	
• at 40 °C	63 A
• at 45 °C	63 A
• at 50 °C	63 A
• at 55 °C	60.6375 A
• at 60 °C	58.275 A
• at 65 °C	55.9125 A
• at 70 °C	53.55 A

Switching capacity according to IEC 60947	
Switching capacity class of the circuit breaker	M
Maximum short-circuit current breaking capacity (Icu)	
• at 240 V	85 kA
• at 415 V	55 kA
• at 440 V	55 kA
• at 500 V	36 kA
• at 690 V	2 kA
Operational short-circuit current breaking capacity (Ics)	
• at 240 V	85 kA
• at 415 V	55 kA
• at 440 V	55 kA
• at 500 V	36 kA
• at 690 V	2 kA
Short-circuit current making capacity (Icm)	
• at 240 V	187 kA
• at 415 V	121 kA
• at 440 V	121 kA
• at 500 V	79 kA
• at 690 V	3.4 kA

Adjustable parameters	
Adjustable response value current / Ig min.	25 A
Adjustable response value current / Ig min.	63 A

Subject to change without notice
© Copyright Siemens

Adjustable response value current / Ig min.	0.5
Adjustable response value current / Ig min.	25
Adjustable response value current / Ig min.	38 A
Adjustable response value current / Ig min.	630 A
Short-term delayed / tripping switchable / I2t=ON/OFF	Yes
Adjustable response value current / Ig min.	0.05 s
Adjustable response value current / Ig min.	0.5 s
Adjustable response value current / Ig min.	0.05 s
Adjustable response value current / Ig min.	0.5 s
Adjustable response value current / Ii min.	95 A
Adjustable response value current / Ii max.	756 A

Mechanical Design

Height	181 mm
Width	105 mm
Depth	86 mm

Connections

Arrangement of electrical connectors / for main current circuit	Front terminal
Type of electrical connection / for main current circuit	Lug terminal
Type of connectable conductor cross-section, connection screw, width x thickness , min.	13 x 1 mm
Type of connectable conductor cross-section, connection screw, width x thickness , max.	25 x 8.5

Auxiliary circuit

Product component	
• undervoltage release	Yes
• Voltage trigger	No
• undervoltage release with leading contact	No
• Trip indicator	No
Number of CO contacts / for auxiliary contacts	0

Accessories

Product extension / optional / motor drive	Yes
Manufacturer's article number	
• of the supplied basic switch	3VA2063-5KP32-0AA0
• of the integrated auxiliary trip	3VA9608-0BB24

Environmental conditions

Protection class IP / on the front	IP40
Ambient temperature	
• during operation / minimum	-25 °C
• during operation / maximum	70 °C

Subject to change without notice
© Copyright Siemens

• during storage / minimum	-40 °C
• during storage / maximum	80 °C

Certificates

Reference code / acc. to DIN EN 81346-2	Q

General Product Approval				EMC	Test Certificates
CCC	VDE	Miscellaneous	EAC	RCM	Type Test Certificates/Test Report

Test Certificates		Shipping Approval			
Miscellaneous	Special Test Certificate	ABS	BUREAU VERITAS	GL	LRS

Shipping Approval	other
RMRS	Miscellaneous

Further information

Information- and Downloadcenter (Catalogs, Brochures,…)
http://www.siemens.com/lowvoltage/catalogs

Industry Mall (Online ordering system)
https://mall.industry.siemens.com/mall/en/en/Catalog/product?mlfb=3VA2063-5KP32-0CA0

Service&Support (Manuals, Certificates, Characteristics, FAQs,...)
https://support.industry.siemens.com/cs/ww/en/ps/3VA2063-5KP32-0CA0

Image database (product images, 2D dimension drawings, 3D models, device circuit diagrams, ...)
http://www.automation.siemens.com/bilddb/cax_en.aspx?mlfb=3VA2063-5KP32-0CA0

CAx-Online-Generator
http://www.siemens.com/cax

Tender specifications
http://www.siemens.com/specifications

Subject to change without notice
© Copyright Siemens

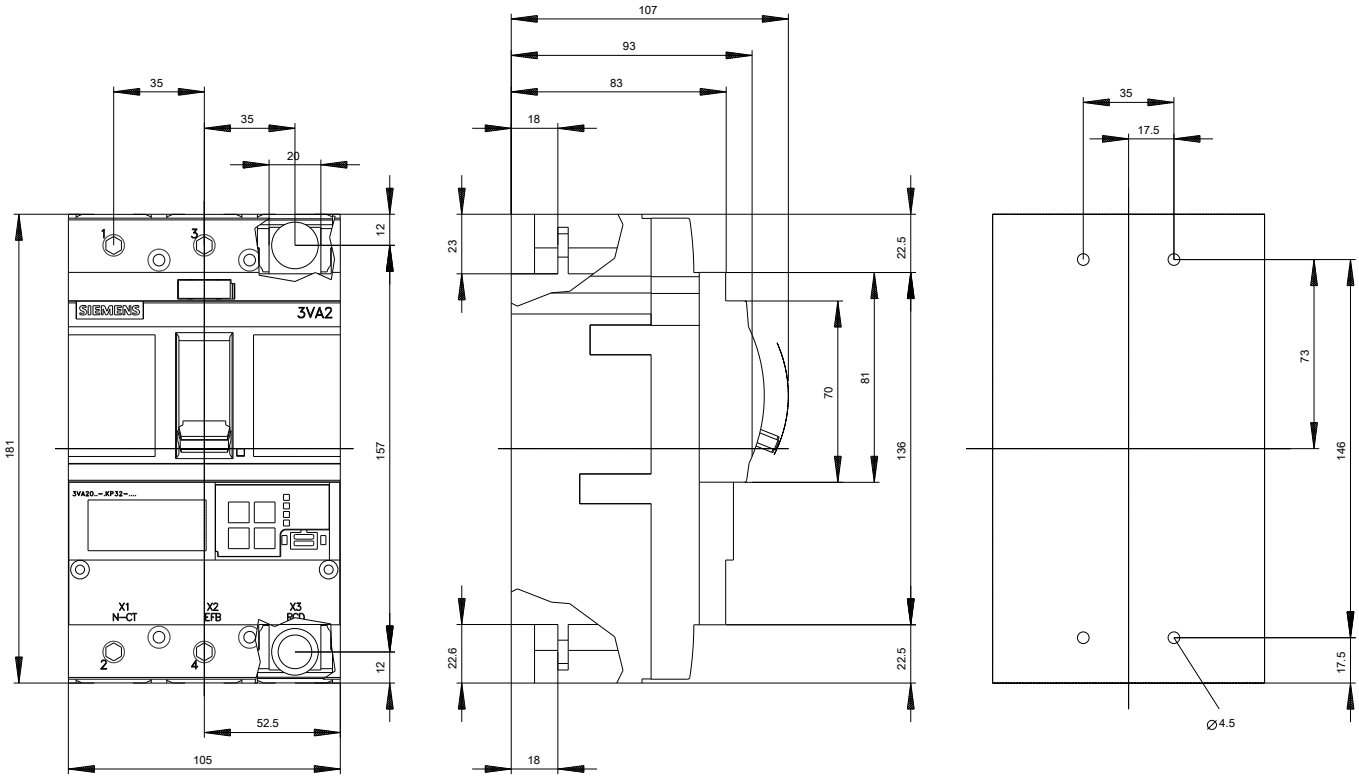

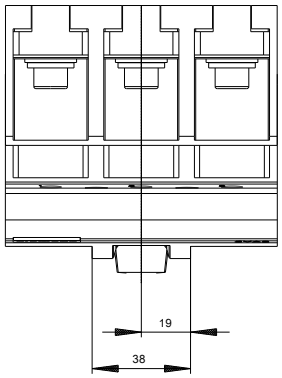

Subject to change without notice
© Copyright Siemens

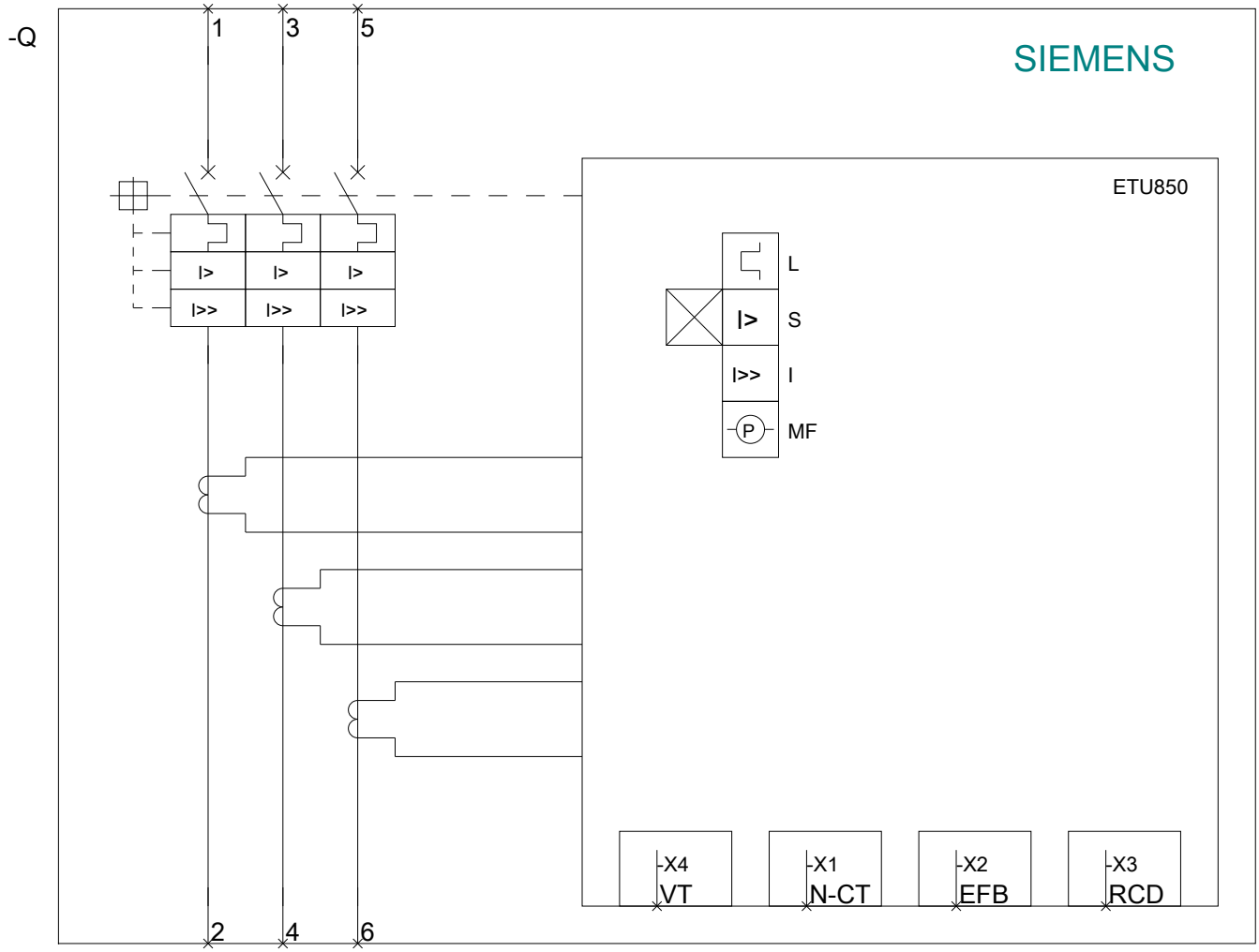

Subject to change without notice
© Copyright Siemens

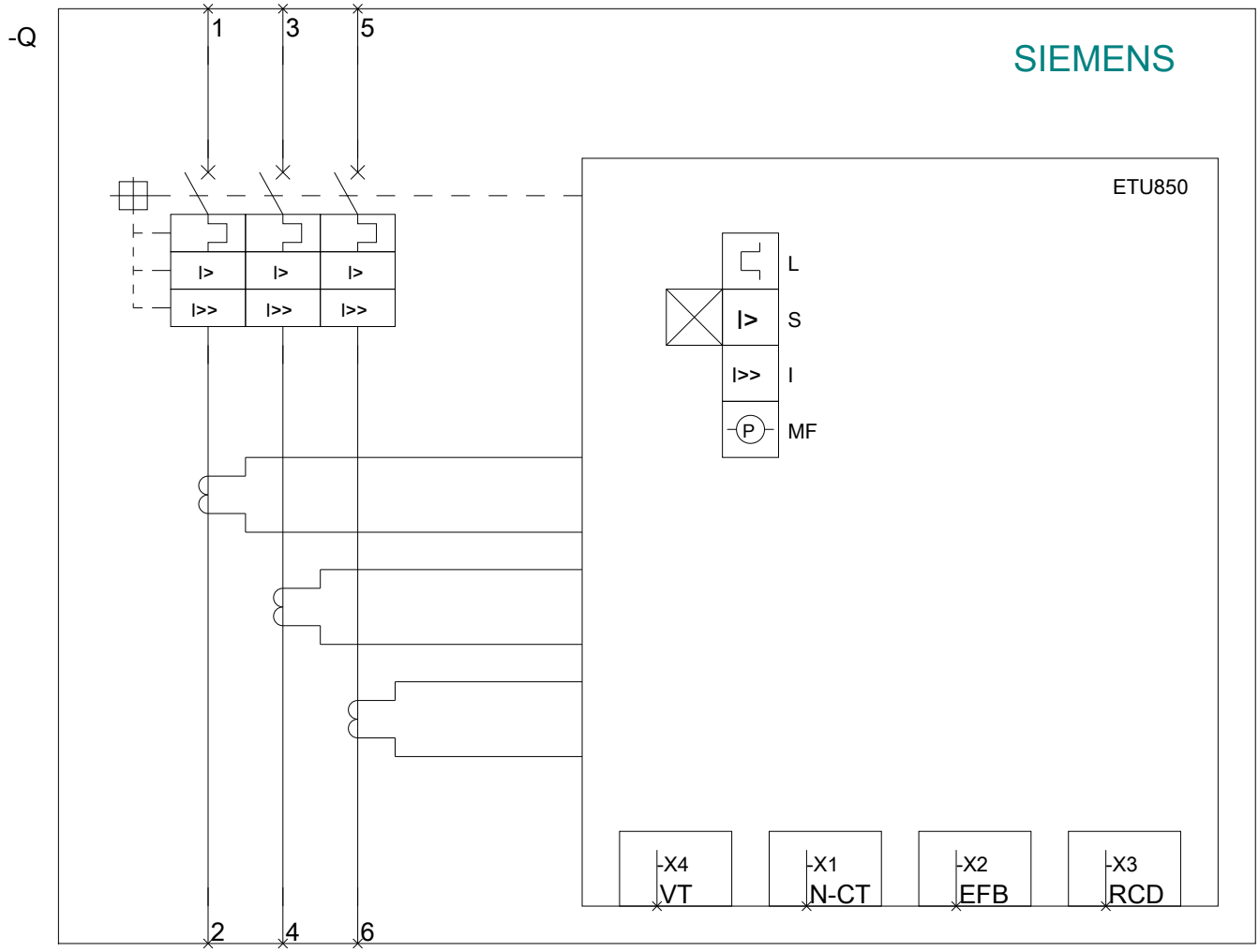

Subject to change without notice
© Copyright Siemens

last modified: 06/14/2018

Subject to change without notice
© Copyright Siemens