DRAWING NO.
SD209500-01

CATALOG NUMBER	COPPER CONDUCTOR SIZE	COPPER CONDUCTOR FIG.	BOLT SIZE	METRIC BOLT SIZE	DIMENSIONS B ±.06	C ±.04	E ±.02	K DIA. ±.02	L ±.09	N ±.03	T REF.	O.D. ±.01	COLOR CODE	DIE INFORMATION DIE INDEX	DIE INFORMATION TYPE	MECHANICAL Y2MR ◁6	OUR840	MD6 MD7 MD6--R2	MD7-34R	HYDRAULIC BCT500 Y500CT	Y34A ◁8 Y34B ◁5 Y34BH	Y35, Y39 ◁5 Y750, BAT35 BAT750,PAT750	Y46 ◁4 ◁5	Y45 ◁3 ◁5	DIELESS (# CRIMPS)	WIRE STRIP LENGTH
YGA8C-TC10	#8 SOLID #8 STRANDED	2	#10	M5	.81 [21]	.41 [10]	-- --	.21 [5]	1.57 [40]	.25 [6]	.08 [2]	.27 [7]	RED	49	RED DIE SET	RED (2)	X8CRT(2)	W8CVT(2) W8CRT(2)	W8CVT(2) W8CRT(2)	W8CVT(2) W8CRT(2) X8CRT(2)	-----	U8CRT(2)	U8CRT(2)	U8CRT(2)	RATCHET Y8MR8-1 (2) MECHANICAL: MY29-3 (2) MY29-11 (2)	7/8"
YGA8C-TC14	#8 SOLID #8 STRANDED	2	1/4	M6	.81 [21]	.44 [10]	-- --	.27 [7]	1.69 [43]	.31 [8]	.08 [2]	.27 [7]			NEST	-----	-----	-----	-----	-----	-----	-----	-----	-----		
YGA8C-TC516	#8 SOLID #8 STRANDED	2	5/16	M8	.81 [21]	.51 [13]	-- --	.33 [8]	1.75 [44]	.34 [9]	.06 [2]	.27 [7]			INDENTOR											
YGA6C-TC10	#6 SOLID #6 STRANDED	2	#10	M5	1.12 [28]	.42 [11]	-- --	.21 [5]	1.89 [48]	.25 [6]	.09 [2]	.29 [7]	BLUE	7 374	BLUE DIE SET	BLUE (2)	X5CRT(2)	W5CRT(2) W5CVT(2)	W5CRT(2) W5CVT(2)	W5CRT(2) W5CVT(2) X5CRT(2)	-----	U5CRT(2) U8CABT(2)	U5CRT(2) U8CABT(2)	U5CRT(2) U8CABT(2)	MECHANICAL: MY29-3 (2) MY29-11 (2) HYDRAULIC: Y644M (1) BAT644M (1) PAT644M (1)	1-3/16"
YGA6C-TC14	#6 SOLID #6 STRANDED	2	1/4	M6	1.12 [28]	.45 [11]	-- --	.27 [7]	2.02 [51]	.31 [8]	.08 [2]	.29 [7]														
YGA6C-TC516	#6 SOLID #6 STRANDED	2	5/16	M8	1.12 [28]	.51 [13]	-- --	.33 [8]	2.08 [53]	.34 [9]	.07 [2]	.29 [7]														
YGA6C-2TC38E2G1	#6 SOLID #6 STRANDED	1	3/8	M10	1.12 [28]	.58 [15]	.75 [19]	.40 [10]	3.42 [87]	.62 [16]	.06 [2]	.29 [7]														
YGA6C-TC38	#6 SOLID #6 STRANDED	2	3/8	M10	1.12 [28]	.58 [15]	-- --	.40 [10]	2.21 [56]	.41 [10]	.06 [2]	.29 [7]			NEST	-----	-----	-----	-----	-----	B6CD(1) A6CD(1)	U6CD-1(1)	U6CD-1(1)	U6CD-1(1)		
YGA6C-TC12	#6 SOLID #6 STRANDED	2	1/2	M12	1.12 [28]	.75 [19]	--	.52 [13]	2.46 [62]	.53 [13]	.12 [3]	.29 [7]			INDENTOR						Y34PR	Y34PR	Y34PR	Y34PR		
YGA2C-2TC38E2G1	#2 SOLID #2 STRANDED	1	3/8	M10	1.25 [32]	.60 [15]	.75 [19]	.40 [10]	3.66 [93]	.62 [16]	.12 [3]	.42 [11]	BROWN	10	BROWN DIE SET	BROWN (4)	X2CRT(2)	W2CRT(2) W2CVT(2)	W2CRT(2) W2CVT(2)	W2CRT(2) W2CVT(2) X2CRT(2)	-----	U2CRT(2)	U2CRT(2)	U2CRT(2)		1-5/16"
YGA2C-2TC38	#2 SOLID #2 STRANDED	1	3/8	M10	1.25 [32]	.60 [15]	1.00 [25]	.40 [10]	3.48 [88]	.41 [10]	.12 [3]	.42 [11]			NEST	-----	-----	-----	-----	-----	B2CD(1) A2CD(1)	U2CD-1(1)	U2CD-1(1)	U2CD-1(1)		
															INDENTOR						Y34PR	Y34PR	Y34PR	Y34PR		

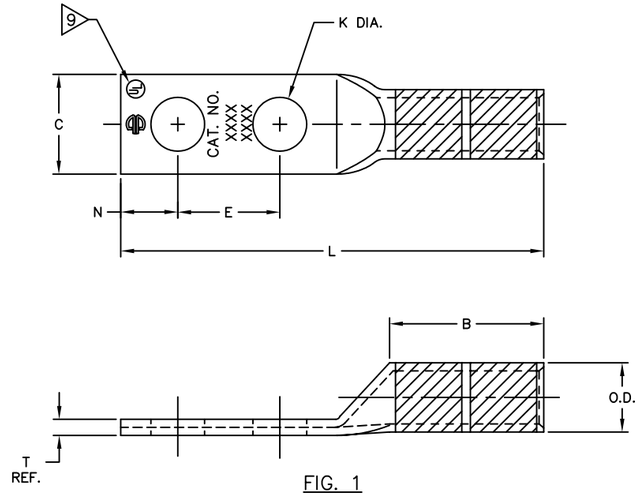

FIG. 1

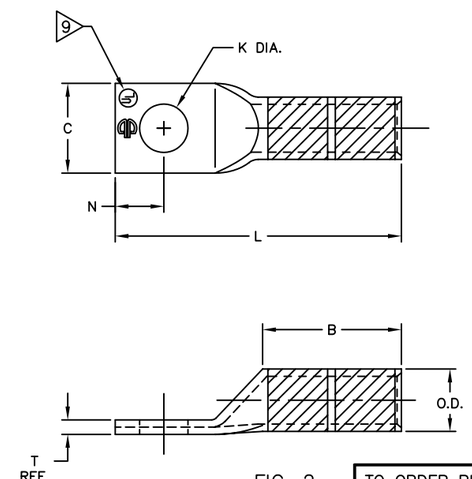

FIG. 2

NOTES:

1. MATERIAL: COPPER
2. BARRELS ARE PREFILLED WITH PENETROX® "E2" AND INDIVIDUALLY SEALED.
3. ◁ CATALOG # PT6515 ADAPTOR IS REQUIRED TO USE "U" DIES IN Y45 SERIES TOOLS.
4. ◁ CATALOG # PUADP-1 ADAPTOR IS REQUIRED TO USE "U" DIES IN Y46 SERIES TOOLS.
5. ◁ Y35P3 INDENTOR ADAPTOR REQUIRED FOR Y34PR INDENTOR.
6. ◁ PERMANENT DIE IN TOOLING.
7. DIMENSIONS IN BRACKETS [ ] ARE IN MILLIMETERS ROUNDED OFF TO THE NEAREST MILLIMETER, UNLESS OTHERWISE NOTED, AND ARE FOR REFERENCE ONLY.
8. ◁ FOR USE BY CUSTOMERS THAT HAVE THIS HYPRESS™. NO NEW Y34A HYPRESS™ TOOLS ARE BEING PROCESSED. Y34A USES A--D NEST DIES ONLY.
9. ◁ CONNECTORS ARE UL 467 LISTED.
10. SUITABLE FOR DIRECT BURIAL IN EARTH OR CONCRETE.
11. "X", "W-RT", "W-VT", & "U" DIE SETS ARE COLOR CODED. "A" & "B" DIES ARE NOT COLOR CODED. NESTS AND INDENTOR TYPE ARE NOT COLOR CODED.

REV.	DATE		DESCRIPTION	ECO	BY	C'K'D.
B	06/24/03	ADDED	CAT. # YGA6C-TC12 TO TABLE	8623	DB	PL

TO ORDER BURNDY® PRODUCTS CALL

UNITED STATES:
1-800-346-4175 (LONDONDERRY, NH)

CANADA:
1-800-361-6975 (QUEBEC)
1-800-387-6487 (ALL OTHER PROVINCES)

FOR PRODUCT INFO: http://www.burndy.com

TO ORDER BURNDY PRODUCTS CALL 1-800-346-4175
MANCHESTER, NH 03109, USA
FOR PRODUCT INFO = http://www.fciconnect.com

HYLUG,™ COPPER GROUND

ITEM NO: N/A

CAT NO: YGA-- (TABLE)

SCALE:	N/A	
DRAWN BY:	R PERRAULT	1/13/95
CHECKER:	K HENRY	1/17/95
DSN APPVL:	C PALAGI	1/19/95
MFG APPVL:	--	--
QC APPVL:	D VARIO	1/25/95
MKT APPVL:	P WERTHMAN	1/25/95
PROD FAM:	--	
PROJECT #:	--	
DOCUMENT TYPE:	Sales	
REL LEVEL:	AutoCAD	

BURNDY

DRAWING NO	REV
SD209500-01	B
SIZE D	SHEET 1 OF 1