DRAWING NO. SE212273

| REV | DATE | DESCRIPTION | ECO | BY | C'H'K. |
|---|---|---|---|---|---|
| D | 1/1/2001 12:00:00 AM | REDRAW AND CATALOG NUMBER UPDATON OF SALES DRAWINGS | 17057 | BSB | BSK |

| CATALOG NO. | CONDUCTOR FLEX | CONDUCTOR CODE (AWG) | BOLT SIZE | FIG. NO. | B ±.08 | C +.04 -.02 | E ±.02 | H REF. | K DIA. ±.02 | L ±.12 | N ±.03 | O.D. ±.01 | T REF. | Y MIN. | DIE INDEX | COLOR CODE | MECHANICAL MD7-34R | MECHANICAL BCT500 Y500CT | HYDRAULIC Y750 Y35, BAT35 Y39, BAT750 | HYDRAULIC Y46 ◁4 | HYDRAULIC Y45 ◁3 | DIELESS (# CRIMPS) | WIRE STRIP LENGTH |
|---|---|---|---|---|---|---|---|---|---|---|---|---|---|---|---|---|---|---|---|---|---|---|---|
| YAZ342TC38FX | 373.7 kcmil 925/24 350 kcmil FLEX | --- | 3/8 [M10] | 1 | 2.25 [57] | 1.55 [39] | 1.00 [25] | --- | .40 [10] | 4.85 [123] | .41 [10] | 1.06 [27] | .23 [6] | 1.43 [36] | 19 OR 470 | BLUE | ◁7 | ◁7 | ◁7 | ◁7 | ◁7 | HYDRAULIC: Y644, Y644M Y644MBH, (1) | 2-5/16 |
| YAZ342TC38FX45 | | | | 2 | | | | 2.94 [75] | | 4.50 [114] | | | | | | | | | | | | | |
| YAZ342TC38FX90 | | | | 3 | | | | 3.41 [87] | | 2.54 [65] | | | | | | | W32VT (4) | W32VT W32RT (4) | U32RT (4) | U32RT (4) | U32RT (4) | | |
| YAZ342TC12FX | | | 1/2 [M12] | 1 | | 1.55 [39] | 1.25 [32] | --- | .53 [13] | 5.60 [142] | .53 [13] | | .23 [6] | 1.81 [46] | | | | | | | | | |
| YAZ342TC12FX45 | 373.7 kcmil 925/24 350 kcmil FLEX | | | 2 | | | | 2.94 [75] | | 5.25 [133] | | | | | | | | | | | | | |
| YAZ342TC12FX90 | | --- | | 3 | 2.25 [57] | | | 3.41 [87] | | 3.29 [84] | | 1.06 [27] | | | 19 OR 470 | BLUE | | | | | | | 2-5/16 |

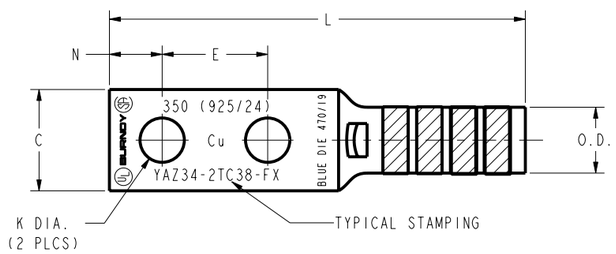


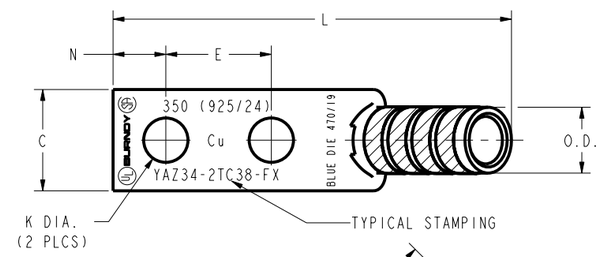


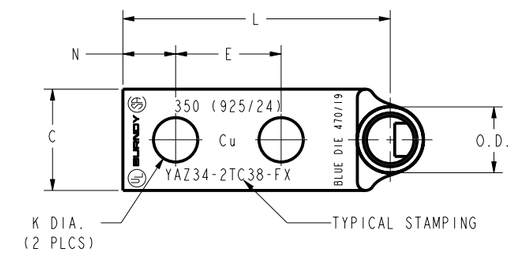


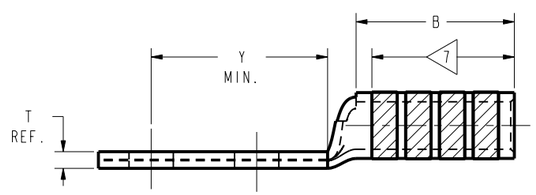


FIG. 1

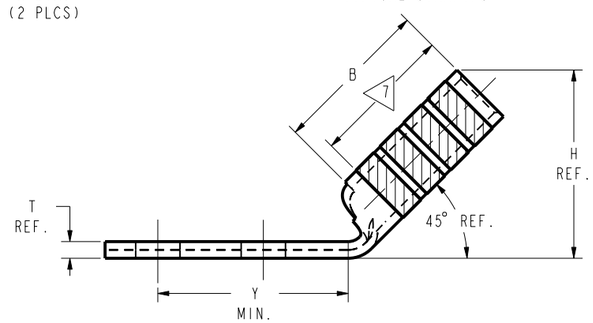


FIG. 2

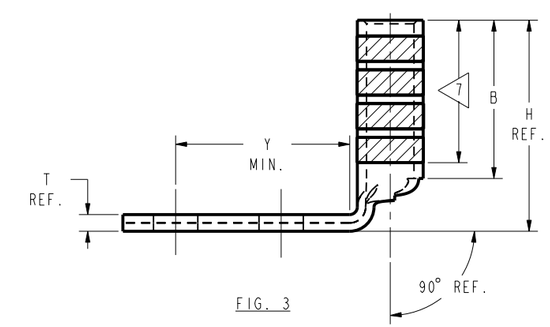


FIG. 3

NOTES:

1. MATERIAL: COPPER TUBING.
2. FINISH: TIN PLATED.
3. ◁3 CATALOG # PT6515 ADAPTOR IS REQUIRED TO USE "U" DIES IN Y45 SERIES TOOLS.
4. ◁4 CATALOG # PUADP-1 ADAPTOR IS REQUIRED TO USE "U" DIES IN Y46 SERIES TOOLS.
5. ◁5 PERMANENT DIE IN TOOLING.
6. DIMENSIONS IN BRACKETS [ ] ARE IN MILLIMETERS ROUNDED OFF TO THE NEAREST MILLIMETER, UNLESS OTHERWISE NOTED, AND ARE FOR REFERENCE ONLY.
7. ◁7 CRIMP (# OF CRIMPS PER TABLE) WITHIN THE LENGTH BETWEEN THE INK STAMPED CRIMPING AREA.

TO ORDER BURNDY® PRODUCTS CALL

UNITED STATES
1-800-346-4175 (LONDONDERRY, NH)

CANADA:
1-800-361-6975 (QUEBEC)
1-800-387-6487 (ALL OTHER PROVINCES)

FOR PRODUCT INFO: http://www.fciconnect.com

HYLUG™ (TWO HOLE FLEX)

| | | |
|---|---|---|
| ITEM NO: | N/A | |
| CAT. NO: | YAZ34--- (TABLE) | |
| DRAWN BY: | B MICHAUD | 8/25/99 |
| CHECKER: | D BOISVERT | 8/26/99 |
| DSN APPVL: | RR TEAM | 9/28/99 |
| MFG APPVL: | -- | -- |
| QA APPVL: | J BRODEUR | 10/6/99 |
| MKT APPVL: | R ROBICHEAU | 10/5/99 |
| PROD FAM: | -- | |
| PROJECT #: | -- | |
| DOCUMENT TYPE: | Sales | |
| REL LEVEL: | Released | |

SCALE: NTS

| SIZE | DRAWING NO | REV |
|---|---|---|
| D | SE212273 | D |
| | SHEET 37 OF 48 | |

REV: PE0200