DRAWING NO. SE211915

REV	DATE	DESCRIPTION	ECO	BY	C'H'K.
A	4/11/2008 12:00:00 AM	REDRAW INTO PRO-E & CATALOG NUMBER UPDATION.	16757	DG	BSK

CATALOG NO.	CONDUCTOR CODE (AWG)	CONDUCTOR NAVY ◁5	BOLT SIZE	FIG. NO.	B ±.08	C ±.04	E ±.02	H REF.	K DIA. ±.02	L ±.12	N ±.04	O.D. ±.01	T REF.	Y MIN.	DIE INDEX	COLOR CODE	MECHANICAL RATCHET MD7-34R MD6	MECHANICAL RATCHET OUR840	HYDRAULIC Y34A ◁7	HYDRAULIC Y750 Y35, BAT35 Y39, BAT750	HYDRAULIC Y46 ◁4	HYDRAULIC Y45 ◁3	HYDRAULIC Y48B ◁8	HYDRAULIC Y60B	DIELESS (# CRIMPS)	WIRE STRIP LENGTH
YAZ282TC14E2	4/0 AWG [----]	200	1/4 [M6]	1	1.62 [41]	1.02 [26]	.75 [19]	----	.27 [7]	3.55 [90]	.31 [8]	.69 [18]	.14 [4]	1.09 [28]	15	PURPLE	W28VT W28RT (4)	W28VT W28RT (4)	A28R (2)	U28RT (2)	U28RT (2)	U28RT (2)	C28R (2)	L28RT (1)	MECHANICAL: MY29-11 (1) HYDRAULIC: Y644, Y644M Y644MBH, Y1000 Y1000BH (1)	1-11/16
YAZ282TC14E245				2				2.02 [51]		3.25 [83]																
YAZ282TC14E290				3				2.36 [60]		1.86 [47]																
YAZ282TC38			3/8 [M10]	1			1.00 [25]	----	.40 [10]	3.99 [101]	.41 [10]			1.43 [36]												
YAZ282TC3845				2				2.02 [51]		3.69 [94]																
YAZ282TC3890				3		1.02 [26]		2.36 [60]		2.30 [58]																
YAZ282TC3890GI				3				2.36 [60]		2.80 [71]				1.93 [49]												
YAZ282NT14			1/4 [M6]	1				----		3.42 [87]																
YAZ282NT1445	4/0 AWG [----]	200		2	1.62 [41]	.75 [19]	.62 [16]	2.02 [51]	.27 [7]	3.40 [86]	.31 [8]	.69 [18]	.14 [4]	.96 [24]	15	PURPLE	W28VT W28RT (4)	W28VT W28RT (4)	A28R (2)	U28RT (2)	U28RT (2)	U28RT (2)	C28R (2)	L28RT (1)		1-11/16
YAZ282NT1490				3				2.36 [60]		3.11 [79]																

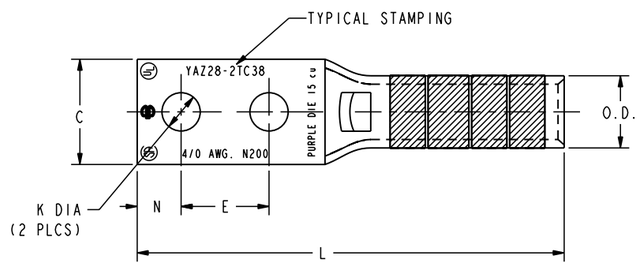

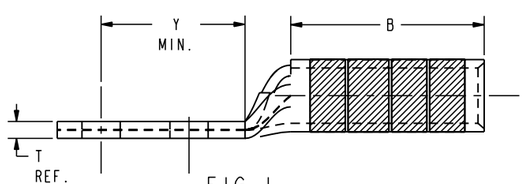

FIG 1

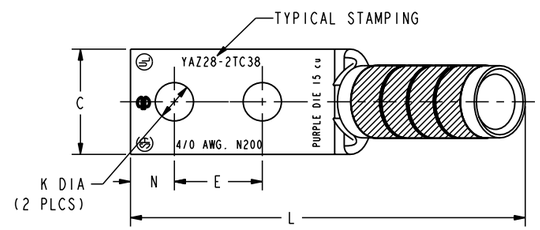

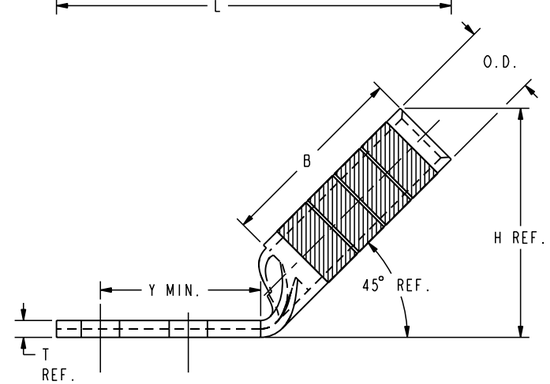

FIG 2

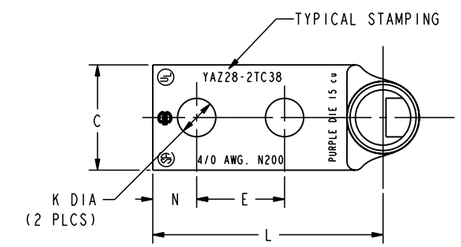

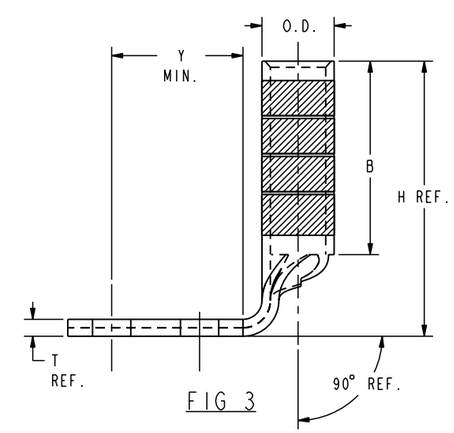

FIG 3

NOTES:

1. MATERIAL: COPPER TUBING.
2. FINISH: TIN PLATED
3. CATALOG # PT6515 ADAPTOR IS REQUIRED TO USE "U" DIES IN Y45 SERIES TOOLS.
4. CATALOG # PUADP-1 ADAPTOR IS REQUIRED TO USE "U" DIES IN Y46 SERIES TOOLS.
5. NAVY CABLE SIZE MAY BE OMITTED ON SOME SIZES BECAUSE OF SPACE LIMITATIONS.
6. DIMENSIONS, METRIC WIRE, & METRIC BOLT SIZES IN BRACKETS [ ] ARE IN MILLIMETERS. DIMENSIONS ARE ROUNDED OFF TO THE NEAREST MILLIMETER, UNLESS OTHERWISE NOTED, AND ARE FOR REFERENCE ONLY.
7. FOR USE BY CUSTOMERS THAT HAVE THIS HYPRESS™ NO NEW Y34A HYPRESS™ ARE BEING PROCESSED.
8. OVERLAPPING CRIMPS ARE REQUIRED ON THESE SIZES.

REV: PE0200

TO ORDER BURNDY® PRODUCTS CALL

UNITED STATES
1-800-346-4175 (LONDONDERRY, NH)

CANADA:
1-800-361-6975 (QUEBEC)
1-800-387-6487 (ALL OTHER PROVINCES)

FOR PRODUCT INFO: http://www.burndy.com

HYLUG™

ITEM NO:	N/A
CAT. NO:	YAZ28-2--- (SEE TABLE)
DRAWN BY:	D.BOISVERT 11/12/98
CHECKER:	K.HENRY 12/03/98
DSN APPVL:	B.MACDONALD 12/02/98
MFG APPVL:	N/A --
QA APPVL:	S.GARY 11/30/98
MKT APPVL:	N/A
SCALE:	4:1
PROD FAM:	--
PROJECT #:	--
DOCUMENT TYPE:	Sales
REL LEVEL:	Released
SIZE	D
DRAWING NO	SE211915
REV	A
SHEET 27 OF 36	

BURNDY