DRAWING NO. SE212273

REV	DATE	DESCRIPTION	ECO	BY	C'H'K.
B	1/1/2001 12:00:00 AM	REDRAW AND CATALOG NUMBER UPDATON OF SALES DRAWINGS	17057	BSB	BSK

CATALOG NO.	CONDUCTOR FLEX	CONDUCTOR CODE (AWG)	BOLT SIZE	FIG. NO.	B ±.08	C +.04 -.02	E ±.02	H REF.	K DIA. ±.02	L ±.12	N ±.03	O.D. ±.01	T REF.	Y MIN.	DIE INDEX	COLOR CODE	MECHANICAL MD7-34R	MECHANICAL OUR840	HYDRAULIC BCT500 Y500CT	HYDRAULIC Y750 Y35, BAT35 Y39, BAT750	HYDRAULIC Y46 ◁4	HYDRAULIC Y45 ◁3	DIELESS (# CRIMPS)	WIRE STRIP LENGTH
YAZV262TC516FX	2/0 WELD 325/24	2/0 AWG [70mm² STR.]	5/16 [M8]	1	1.50 [38]	.93 [24]	1.00 [25]	---	.33 [8]	3.64 [92]	.34 [9]	.63 [16]	.13 [3]	1.37 [35]	13	BLACK	◁7 W26VT X26RT W26RT (4)	◁7 X26RT W26VT (4)	◁7 W26VT X26RT W26RT (4)	◁7 U26RT (2)	◁7 U26RT (2)	◁7 U26RT (2)	MECHANICAL: MY29-11 (1) HYDRAULIC: Y644, Y644M Y644MBH, (1)	1-9/16
YAZV262TC516FX45				2				1.78 [45]		3.36 [85]														
YAZV262TC516FX90				3				2.12 [54]		2.10 [53]														
YAZV262TC38FX			3/8 [M10]	1		.93 [24]	1.00 [25]	---	.41 [10]	3.76 [96]	.40 [10]		.13 [3]	1.43 [36]										
YAZV262TC38FX45				2				1.78 [45]		3.48 [88]														
YAZV262TC38FX90	2/0 WELD 325/24	2/0 AWG [70mm² STR.]		3	1.50 [38]			2.12 [54]		2.23 [57]		.63 [16]			13	BLACK								1-9/16

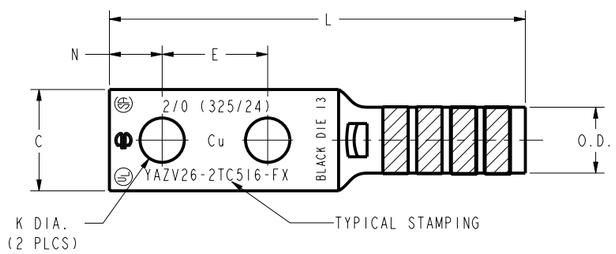

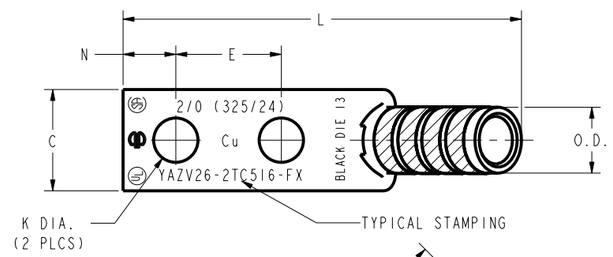

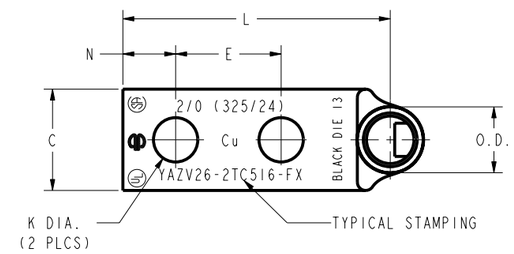

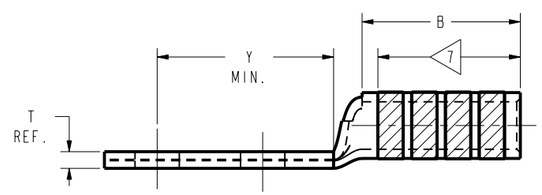

FIG. 1

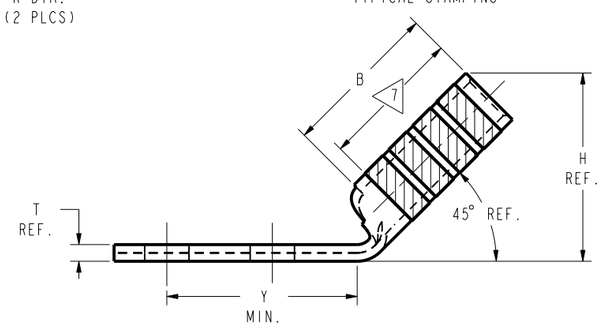

FIG. 2

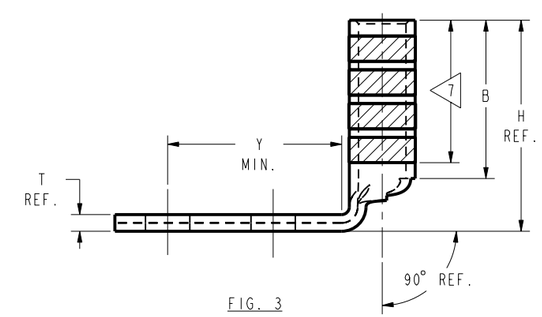

FIG. 3

NOTES:

1. MATERIAL: COPPER TUBING.
2. FINISH: TIN PLATED.
3. ◁3 CATALOG # PT6515 ADAPTOR IS REQUIRED TO USE "U" DIES IN Y45 SERIES TOOLS.
4. ◁4 CATALOG # PUADP-1 ADAPTOR IS REQUIRED TO USE "U" DIES IN Y46 SERIES TOOLS.
5. ◁5 PERMANENT DIE IN TOOLING.
6. DIMENSIONS IN BRACKETS [ ] ARE IN MILLIMETERS ROUNDED OFF TO THE NEAREST MILLIMETER, UNLESS OTHERWISE NOTED, AND ARE FOR REFERENCE ONLY.
7. ◁7 CRIMP (# OF CRIMPS PER TABLE) WITHIN THE LENGTH BETWEEN THE INK STAMPED CRIMPING AREA.

TO ORDER BURNDY® PRODUCTS CALL

UNITED STATES
1-800-346-4175 (LONDONDERRY, NH)

CANADA:
1-800-361-6975 (QUEBEC)
1-800-387-6487 (ALL OTHER PROVINCES)

FOR PRODUCT INFO: http://www.fciconnect.com

HYLUG™ (TWO HOLE FLEX)

ITEM NO:	N/A	
CAT. NO:	YAZV26---	(TABLE)
DRAWN BY:	B MICHAUD	8/25/99
CHECKER:	K HENRY	8/26/99
DSN APPVL:	RR TEAM	9/28/99
MFG APPVL:	--	--
QA APPVL:	J BRODEUR	10/6/99
MKT APPVL:	R ROBICHEAU	10/5/99
PROD FAM:	--	
PROJECT #:	--	
DOCUMENT TYPE:	Sales	
REL LEVEL:	Released	

SCALE: NTS

SIZE	DRAWING NO	REV
D	SE212273	B
	SHEET 25 OF 48	

REV: PE0200