REV	DATE	DESCRIPTION	ECO	BY	C'H'K.
C	2018-02-26 00:00:00 EST	"L" WAS 4.29 [109] FOR YA252LN	48588	DD	PB

CATALOG NUMBER 11	STRANDED COPPER CONDUCTOR ACCOMMODATED			BOLT SIZE	METRIC BOLT SIZE	DIMENSIONS								
	CODE (AWG)	NAVY	METRIC SIZE (CLASS 2)			B	C	E	K DIA.	L	N	O.D.	T REF.	Z MIN.
YA252LN	1/0 AWG	100	-----	1/2	M12	.88 [22]	.83 [21]	1.75 [44]	.56 [14]	4.32 [110]	.63 [16]	.51 [13]	.11 [3]	.64 [16]
YA26L2TC14	2/0 AWG	125	70mm² STR [11]	1/4	M6	.94 [24]		.62 [16]	.27 [7]	2.64 [67]	.31 [8]	.56 [14]	.12 [3]	.33 [8]
YA26L2TC14E2				1/4	M6			.75 [19]	.27 [7]	2.76 [70]	.31 [8]			.33 [8]
YA26L2TC14E1				1/4	M6			1.00 [25]	.27 [7]	3.01 [76]	.31 [8]			.33 [8]
YA262L				5/16	-----			.88 [22]	.33 [8]	2.95 [75]	.34 [9]			.36 [9]
YA26L2TC38				3/8	-----			1.00 [25]	.40 [10]	3.20 [81]	.41 [10]			.42 [11]
YA262LN				1/2	M12	.94 [24]	.83 [21]	1.75 [44]	.56 [14]	4.39 [112]	.63 [16]	.56 [14]	.12 [3]	.64 [16]

CONNECTOR SIZE	TOLERANCES						
	B	C	E	K DIA.	L	N	O.D.
-8C THRU -25	±.06	±.04	±.02	±.02	±.09	±.03	±.01
-26 THRU -34	±.08	±.04	±.02	±.02	±.12	±.03	±.01
-35 AND UP	±.09	±.06	±.02	±.02	±.15	±.06	±.01

TOLERANCE BLOCK

INSTALLATION TOOLING (# CRIMPS)

CATALOG NUMBER	COLOR CODE	DIE INFORMATION		MECHANICAL				HYDRAULIC						DIELESS (# CRIMPS)	WIRE STRIP LENGTH
		DIE INDEX	TYPE	YIMRTC 6	OUR840	MD6 MD7	MD6--R2 MD7-34R	Y34A 8 Y34B Y34BH	Y35,Y39 Y750, PAT750 5	Y46 4 PAT46 5	Y45 3 5	Y48B	Y60BHU		
YA252LN	PINK	12	PINK DIE SET	-----	X25RT(2)	W25RT(2) W25VT(2)	W25RT(2) W25VT(2)	A25R(1)	U25RT(1) U2CABT(1)	U25RT(1) U2CABT(1)	U25RT(1) U2CABT(1)	-----	-----	MECHANICAL: MRC840(2) MY29-3(1) MY29-11(1)	15/16"
		348	NEST	-----	-----	-----	-----	B25D(1) A25D(1)	U25D-1(1)	U25D-1(1)	U25D-1(1)	-----	-----		
			INDENTOR					Y34PR	Y34PR	Y34PR	Y34PR				
YA26L2TC14 YA26L2TC14E2 YA26L2TC14E1 YA262L YA26L2TC38 YA262LN	BLACK	13	BLACK DIE SET	-----	X26RT(2)	W26RT(2) W26VT(2)	W26RT(2) W26VT(2)	-----	U26RT(1)	U26RT(1)	U26RT(1)	-----	-----	HYDRAULIC: Y81KFT(1) Y4PC834(1) Y644(1)	1"
			NEST	-----	-----	-----	-----	B26D(1) A26D(1)	U26D-1(1)	U26D-1(1)	U26D-1(1)	-----	-----		
			INDENTOR					Y34PR	Y34PR	Y34PR	Y34PR				

NOTES:

1. MATERIAL: COPPER TUBING.
2. FINISH: TIN PLATED.
3. CATALOG # PT6515 ADAPTOR IS REQUIRED TO USE "U" DIES IN Y45 SERIES TOOLS.
4. CATALOG # PUADP-1 ADAPTOR IS REQUIRED TO USE "U" DIES IN Y46 SERIES TOOLS.
5. Y35P3 INDENTOR ADAPTOR REQUIRED FOR Y34PR INDENTOR.
6. PERMANENT DIE IN TOOING.
7. DIMENSIONS IN BRACKETS [ ] ARE IN MILLIMETERS ROUNDED OFF TO THE NEAREST MILLIMETER, UNLESS OTHERWISE NOTED, AND ARE FOR REFERENCE ONLY.
8. FOR USE BY CUSTOMERS THAT HAVE THIS HYPRESS™. NO NEW Y34A HYPRESS™ TOOLS ARE BEING PROCESSED. Y34A USES A--D TYPE NEST DIES.
9. CONNECTORS ARE UL LISTED; UNDRILLED VERSIONS ARE NOT UL LISTED.
10. CONNECTORS ARE CSA CERTIFIED; UNDRILLED VERSIONS ARE NOT CSA CERTIFIED.
11. FOR UNDRILLED VERSIONS ADD SUFFIX "-U" TO END OF CATALOG NUMBER. FOR UNDRILLED VERSIONS, USE D MIN. = N MAX. + E MIN. + Z MIN.
12. "X", "W-RT", "W-VT", "U", & "L" DIE SETS ARE COLOR CODED. "A", "B", AND "C" DIES ARE NOT COLOR CODED. NESTS AND INDENTOR TYPE ARE NOT COLOR CODED.

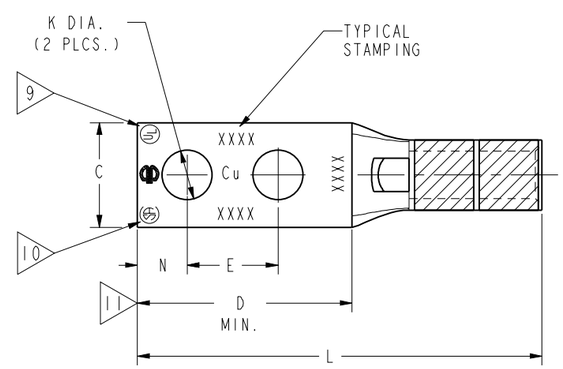

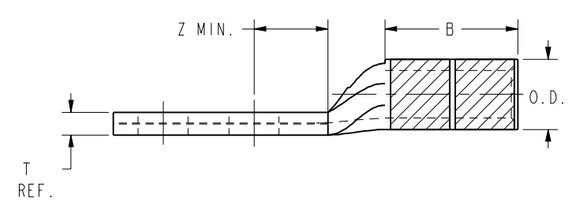

REFERENCE: SE209512
SUPERSEDES: SC91923

TO ORDER BURNDY® PRODUCTS CALL

UNITED STATES
1-800-346-4175 (LONDONDERRY, NH)

CANADA:
1-800-361-6975 (QUEBEC)
1-800-387-6487 (ALL OTHER PROVINCES)

FOR PRODUCT INFO: http://www.burndy.com

HYLUG™ COPPER

ITEM NO:	N/A	
CAT. NO:	YA--2L-, YA--2TC-- (TABLE)	
DRAWN BY:	J.MICHAUD	11/18/94
CHECKER:	D.FILLION	11/18/94
DSN APPVL:	C.PALAGI	10/24/94
MFG APPVL:	--	--
QA APPVL:	C.ACKERMAN	11/17/94
MKT APPVL:	T.NELSON	11/10/94
PROD FAM:	CM&R COMPRESSION	
PROJECT #:	--	
DOCUMENT TYPE:	Sales	
REL LEVEL:	Released	

BURNDY

SCALE: NTS

DRAWING NO	REV
SD035209	C

SIZE: D

SHEET 7 OF 18

REV: PE0200