DRAWING NO. SE212273

REV	DATE	DESCRIPTION	ECO	BY	C'H'K.
B	1/1/2001 12:00:00 AM	REDRAW AND CATALOG NUMBER UPDATON OF SALES DRAWINGS	17057	BSB	BSK

CATALOG NO.	CONDUCTOR FLEX	CONDUCTOR CODE (AWG)	BOLT SIZE	FIG. NO.	B ±.06	C +.04 -.02	E ±.02	H REF.	K DIA. ±.02	L ±.09	N ±.03	O.D. ±.01	T REF.	Y MIN.	DIE INDEX	COLOR CODE	MECHANICAL MD7-34R	MECHANICAL OUR840	MECHANICAL Y2MR ◁5	HYDRAULIC BCT500 Y500CT	HYDRAULIC Y750 Y35, BAT35 Y39, BAT750	HYDRAULIC Y46 ◁4	HYDRAULIC Y45 ◁3	DIELESS (# CRIMPS)	WIRE STRIP LENGTH
YAZV2C2TC14FX	#2 WELD 125/24 150/24	#2 AWG	1/4 [M6]	1	1.38 [35]	.68 [17]	.62 [16]	---	.27 [7]	3.01 [76]	.31 [8]	.46 [12]	.10 [3]	.96 [24]	10	BROWN	◁7 W2CVT X2CRT W2CRT (2)	◁7 X2CRT W2CVT (2)	BROWN (4)	◁7 W2CVT X2CRT W2CRT (2)	◁7 U2CRT (2)	◁7 U2CRT (2)	◁7 U2CRT (2)	MECHANICAL: MY29-11 (1) HYDRAULIC: Y644, Y644M Y644MBH, (1)	1-7/16
YAZV2C2TC14FX45				2				1.57 [40]		2.75 [70]															
YAZV2C2TC14FX90				3				1.90 [48]		1.60 [41]															
YAZV2C2TC14E2FX	#2 WELD 125/24 150/24	#2 AWG	1/4 [M6]	1	1.38 [35]	.68 [17]	.75 [19]	---	.27 [7]	3.13 [80]	.31 [8]	.46 [12]	.10 [3]	1.09 [28]											
YAZV2C2TC14E2FX45				2				1.57 [40]		2.87 [73]															
YAZV2C2TC14E2FX90				3				1.90 [48]		1.73 [44]					10	BROWN			BROWN (4)						1-7/16

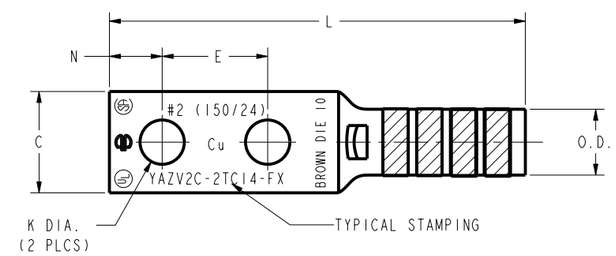

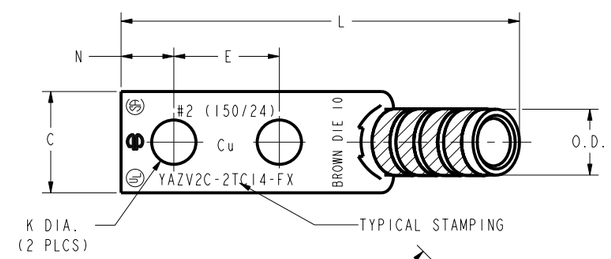

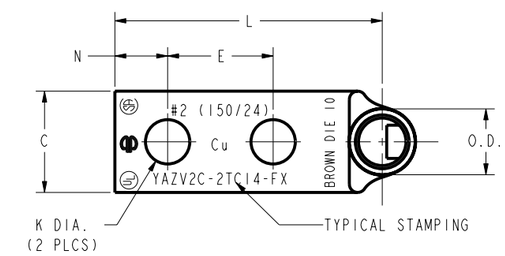

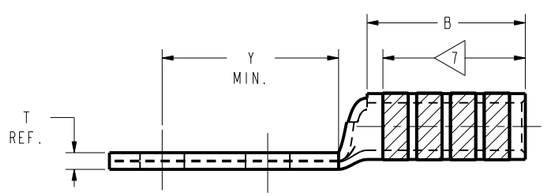

FIG. 1

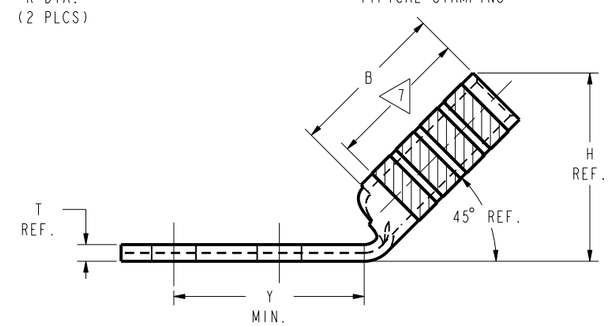

FIG. 2

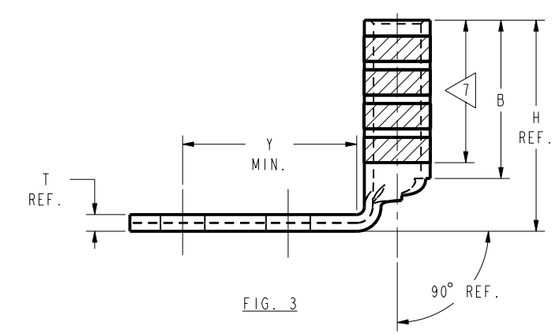

FIG. 3

NOTES:

1. MATERIAL: COPPER TUBING.
2. FINISH: TIN PLATED.
3. ◁3 CATALOG # PT6515 ADAPTOR IS REQUIRED TO USE "U" DIES IN Y45 SERIES TOOLS.
4. ◁4 CATALOG # PUADP-1 ADAPTOR IS REQUIRED TO USE "U" DIES IN Y46 SERIES TOOLS.
5. ◁5 PERMANENT DIE IN TOOLING.
6. DIMENSIONS IN BRACKETS [ ] ARE IN MILLIMETERS ROUNDED OFF TO THE NEAREST MILLIMETER, UNLESS OTHERWISE NOTED, AND ARE FOR REFERENCE ONLY.
7. ◁7 CRIMP (# OF CRIMPS PER TABLE) WITHIN THE LENGTH BETWEEN THE INK STAMPED CRIMPING AREA.

TO ORDER BURNDY® PRODUCTS CALL

UNITED STATES
1-800-346-4175 (LONDONDERRY, NH)

CANADA:
1-800-361-6975 (QUEBEC)
1-800-387-6487 (ALL OTHER PROVINCES)

FOR PRODUCT INFO: http://www.fciconnect.com

HYLUG™ (TWO HOLE FLEX)

ITEM NO:	N/A	
CAT. NO:	YAZV2C---	(TABLE)
DRAWN BY:	D BOISVERT	8/19/99
CHECKER:	K HENRY	8/26/00
DSN APPVL:	RR TEAM	9/28/00
MFG APPVL:	--	--
QA APPVL:	J BRODEUR	10/6/99
MKT APPVL:	R ROBICHEAU	10/5/99
PROD FAM:	--	
PROJECT #:	--	
DOCUMENT TYPE:	Sales	
REL LEVEL:	Released	

SCALE: NTS

SIZE	DRAWING NO	REV
D	SE212273	B
	SHEET 12 OF 48	

REV: PE0200