DRAWING NO. SE212448

CATALOG NO.	CONDUCTOR FLEX	CONDUCTOR CODE (AWG)	BOLT SIZE	FIG. NO.	DIMENSIONS B ±.06	C +.04 -.02	H REF.	K DIA. ±.02	L ±.09	N ±.03	O.D. ±.01	T REF.	Z MIN.	INSTALLATION TOOLING (# CRIMPS) DIE INDEX	COLOR CODE	MECHANICAL MD7-34R MD6	MECHANICAL OUR840	MECHANICAL Y2MR ◁5	HYDRAULIC BCT500 Y500CT	HYDRAULIC Y750 Y35,PAT35 Y39,PAT750	HYDRAULIC Y46 ◁4	HYDRAULIC Y45 ◁3	DIELESS (# CRIMPS)	WIRE STRIP LENGTH
YAZV2CTC14FX	#2 WELD 125/24 150/24	#2 AWG	1/4 [M6]	1	1.38 [35]	.68 [17]	--	.27 [7]	2.37 [60]	.31 [8]	.46 [12]	.10 [3]	.33 [8]	10	BROWN	W2CVT X2CRT W2CRT (2)	X2CRT W2CVT (2)	BROWN (4)	W2CVT X2CRT W2CRT (2)	U2CRT (2)	U2CRT (2)	U2CRT (2)	MECHANICAL: MY29- 11(1) HYDRAULIC: Y644,Y644M PAT644, Y644MBH (1)	1-7/16
YAZV2CTC14FX45				2			1.57 [40]		2.11 [54]															
YAZV2CTC14FX90				3			1.90 [48]		.97 [25]															
YAZV2CTC38FX			3/8 [M10]	1		.68 [17]	--	.40 [10]	2.56 [65]	.41 [10]		.10 [3]	.42 [11]											
YAZV2CTC38FX45				2			1.57 [40]		2.30 [58]															
YAZV2CTC38FX90				3			1.90 [48]		1.15 [29]															
YAZV2CTC12FX	#2 WELD 125/24 150/24	#2 AWG	1/2 [M12]	1	1.38 [35]	.77 [20]	--	.52 [13]	2.87 [73]	.53 [13]	.46 [12]	.09 [2]	.55 [14]	10	BROWN	W2CVT X2CRT W2CRT (2)	X2CRT W2CVT (2)	BROWN (4)	W2CVT X2CRT W2CRT (2)	U2CRT (2)	U2CRT (2)	U2CRT (2)		1-7/16
YAZV2CTC12FX45				2			1.82 [46]		2.56 [65]															
YAZV2CTC12FX90				3			1.70 [43]		1.40 [36]															

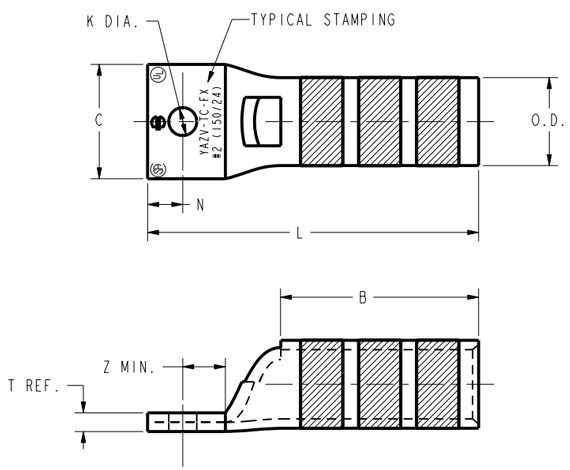

FIG.1

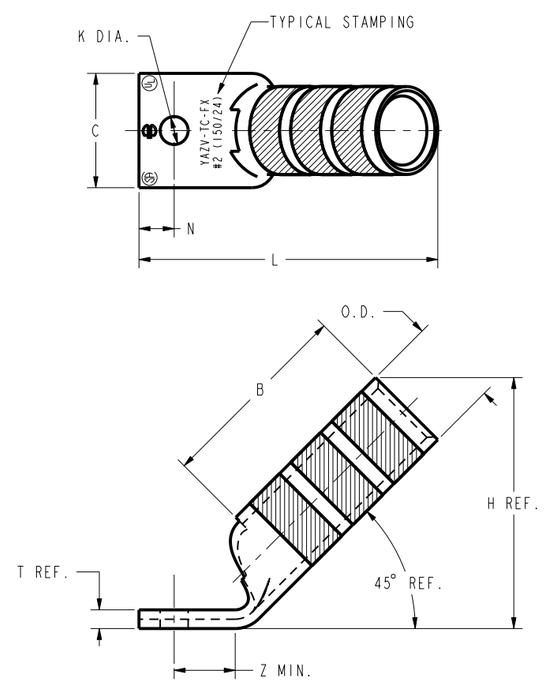

FIG.2

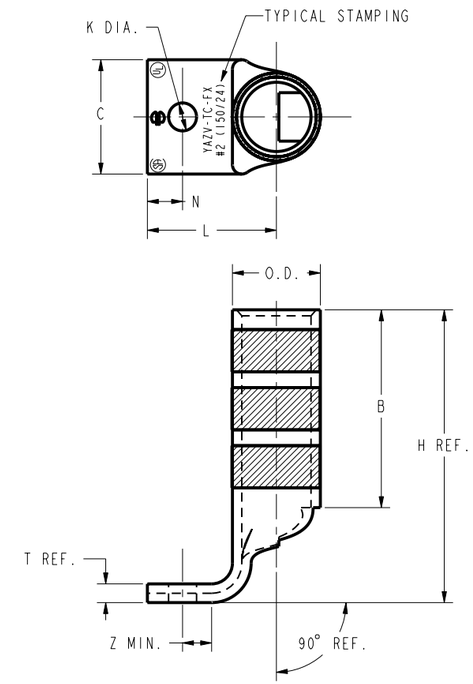

FIG.3

NOTES:

1. MATERIAL: COPPER TUBING.
2. FINISH: TIN PLATED
3. CATALOG # PT6515 ADAPTOR IS REQUIRED TO USE " U" DIES IN Y45 SERIES TOOLS.
4. CATALOG # PUADP-1 ADAPTOR IS REQUIRED TO USE " U" DIES IN Y46 SERIES TOOLS.
5. PERMANENT DIE IN TOOLING.
6. DIMENSIONS IN BRACKETS [ ] ARE IN MILLIMETERS. DIMENSIONS ARE ROUNDED OFF TO THE NEAREST MILLIMETER, UNLESS OTHERWISE NOTED, AND ARE FOR REFERENCE ONLY.
7. UL LISTED AND CSA CERTIFIED CONNECTOR.

REV	DATE	DESCRIPTION	ECO	BY	C'H'K.
B	12/16/2013 11:26:00 AM	DRAWING RELEASED --	34098	GV	MB

TO ORDER BURNDY® PRODUCTS CALL

UNITED STATES
1-800-346-4175 (LONDONDERRY, NH)

CANADA:
1-800-361-6975 (QUEBEC)
1-800-387-6487 (ALL OTHER PROVINCES)

FOR PRODUCT INFO: http://www.burndy.com

HYLUGS™ (ONE HOLE FLEX)

ITEM NO: --
CAT. NO: YAZV2C-TC (TABLE)
DRAWN BY: D.BOISVERT 08/22/00
CHECKER: J.MICHAUD 08/28/00
DSN APPVL: J.MICHAUD 08/21/00
MFG APPVL: T.THRELFALL
QA APPVL: T.WATTS
MKT APPVL: J.SYLVIA
SCALE: 1:1
PROD FAM: CM&R COMPRESSION
PROJECT #: --
DOCUMENT TYPE: Sales
REL LEVEL: Released
SIZE: D
DRAWING NO: SE212448
SHEET 4 OF 16
REV: B

BURNDY

REV: PE0200