DRAWING NO. SE212356

REV	DATE	DESCRIPTION	ECO	BY	C'H'K.
B	05/08/2017 00:00:00 AM	LOGO UPDATION	46692	BK	MB

CATALOG NO.	CONDUCTOR CODE (AWG)	CONDUCTOR NAVY 5	BOLT SIZE	FIG. NO.	DIMENSIONS B ±.04	C ±.04	H REF.	K DIA. ±.02	L ±.06	N ±.03	O.D. ±.01	T REF.	Z MIN.	INSTALLATION TOOLING (# CRIMPS) DIE INDEX	COLOR CODE	MECHANICAL MD7-34R MD6	OUR840	Y8MRB-1 Y2MR 6	HYDRAULIC Y750 Y35, BAT35 Y39, BAT750	Y46 4	Y45 3	DIELESS (# CRIMPS)	WIRE STRIP LENGTH
YAZV10TC14	14-10 [2.5mm² STR, 4mm² SOL, 4mm² STR]	---	1/4 [M6]	1	.69 [18]	.41 [10]	--	.27 [7]	1.52 [39]	.31 [8]	.21 [5]	.05 [1]	.33 [8]	---	---	---	---	---	---	---	---	RATCHET, Y8MRB-1 MR8G98 (2) CRIMPS NON-RATCHET Y10D Y14MV (2) CRIMPS	3/4
YAZV10TC1445				2			.77 [20]		1.40 [36]														
YAZV10TC1490				3			.94 [24]		.82 [21]														

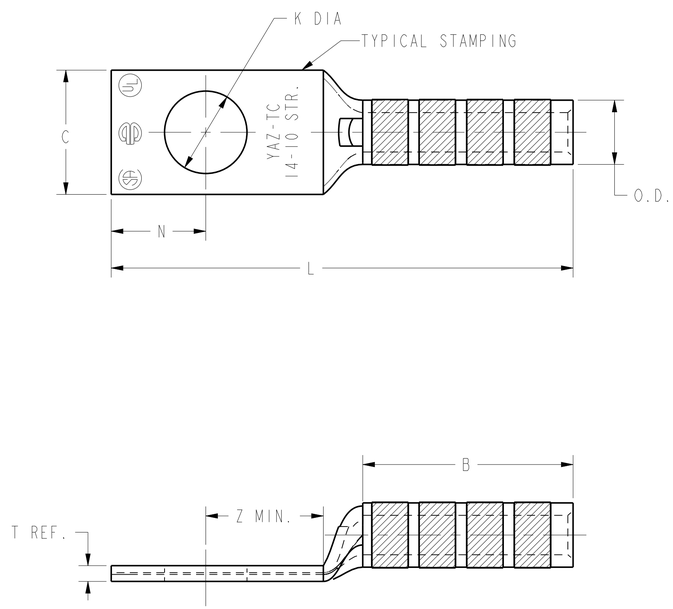

FIG. 1

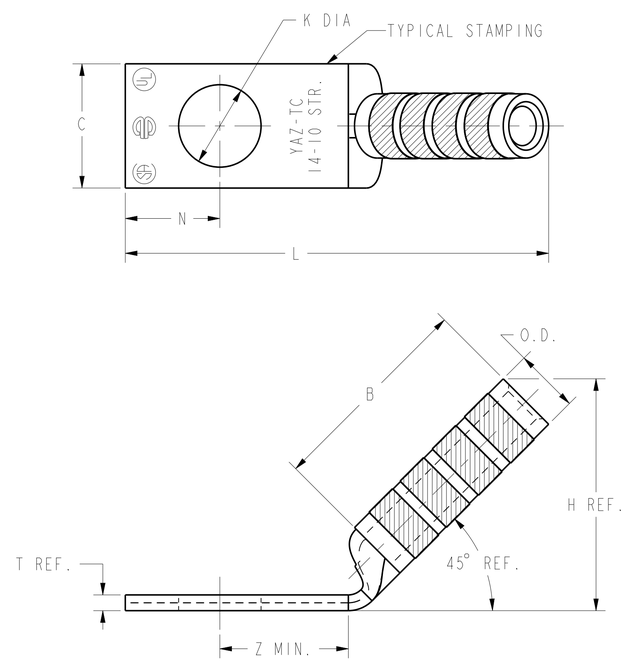

FIG. 2

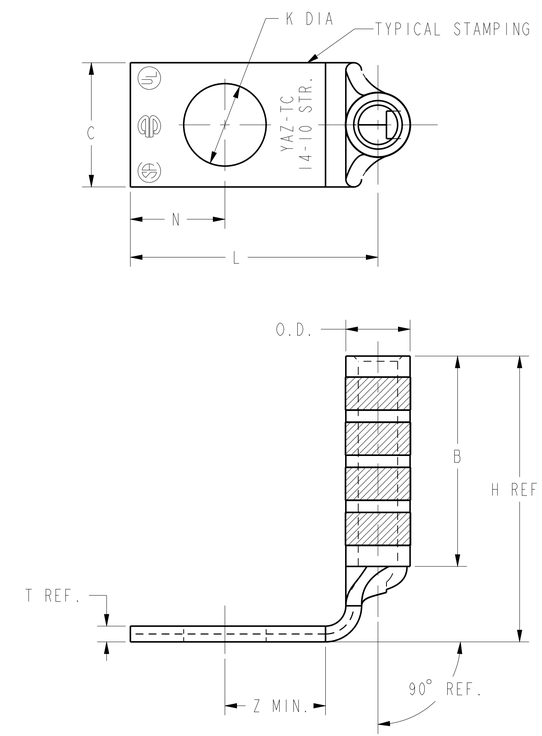

FIG. 3

NOTES:

1. MATERIAL: COPPER TUBING.
2. FINISH: TIN PLATED
3. CATALOG # PT6515 ADAPTOR IS REQUIRED TO USE "U" DIES IN Y45 SERIES TOOLS.
4. CATALOG # PUADP-1 ADAPTOR IS REQUIRED TO USE "U" DIES IN Y46 SERIES TOOLS.
5. NAVY CABLE SIZE MAY BE OMITTED ON SOME SIZES BECAUSE OF SPACE LIMITATIONS.
6. PERMANENT DIE IN TOOLING.
7. DIMENSIONS, METRIC WIRE, & METRIC BOLT SIZES IN BRACKETS [ ] ARE IN MILLIMETERS. DIMENSIONS ARE ROUNDED OFF TO THE NEAREST MILLIMETER, UNLESS OTHERWISE NOTED, AND ARE FOR REFERENCE ONLY.

TO ORDER BURNDY® PRODUCTS CALL

UNITED STATES
1-800-346-4175 (LONDONDERRY, NH)

CANADA:
1-800-361-6975 (QUEBEC)
1-800-387-6487 (ALL OTHER PROVINCES)

FOR PRODUCT INFO: http://www.burndy.com

HYLUG™ (ONE HOLE CODE)

ITEM NO: NA
CAT. NO: YAZV10-TC- (TABLE)
DRAWN BY: D.BOISVERT 02/03/2000
CHECKER: K.MCCARTHY 04/05/2000
DSN APPVL: J.MICHAUD 05/04/2000
MFG APPVL: N/A --
QA APPVL: S.BROWN --
MKT APPVL: R.ROBICHEAU 02/01/2000
SCALE: NTS
PROD FAM: --
PROJECT #: --
DOCUMENT TYPE: Sales
REL LEVEL: Released
SIZE D
DRAWING NO SE212356
REV B
SHEET 1 OF 40

BURNDY

REV: PE0200