DRAWING NO. SD035209

REV	DATE	DESCRIPTION	ECO	BY	C'H'K.
E	05/14/2012 00:00:00 AM	CAT.# YA28L2TC38E10 ADDED TO THE TABLE	27506	DK	MA

CATALOG NUMBER 11	STRANDED COPPER CONDUCTOR ACCOMMODATED			BOLT SIZE	METRIC BOLT SIZE	DIMENSIONS								
	CODE (AWG)	NAVY	METRIC SIZE (CLASS 2)			B	C	E	K DIA.	L	N	O.D.	T REF.	Z REF.
YA27L2TC14E1	3/0 AWG	150	-----	1/4	M6	1.00 [25]	.90 [23]	1.00 [25]	.27 [7]	3.11 [79]	.31 [8]	.62 [16]	.12 [3]	.33 [8]
YA27L2TC14E2				1/4	M6		.90 [23]	.75 [19]	.27 [7]	2.86 [73]	.31 [8]		.12 [3]	.33 [8]
YA272L				3/8	M10		.91 [23]	1.00 [25]	.41 [10]	3.30 [84]	.41 [10]		.13 [3]	.42 [11]
YA27L2TC38				3/8	M10		.90 [23]	1.00 [25]	.41 [10]	3.30 [84]	.41 [10]		.12 [3]	.42 [11]
YA272LN				1/2	M12	1.00 [25]	.91 [23]	1.75 [44]	.56 [14]	4.48 [114]	.63 [16]	.62 [16]	.13 [3]	.64 [16]
YA28L2TC14E2	4/0 AWG	200	-----	1/4	M6	.88 [22]	1.02 [26]	.75 [19]	.27 [7]	2.78 [71]	.31 [8]	.69 [18]	.14 [4]	.33 [8]
YA28L2TC14E1				1/4	M6			1.00 [25]	.27 [7]	3.03 [77]	.31 [8]			.33 [8]
YA28L2NTC516				5/16	-----			.75 [19]	.33 [8]	3.84 [98]	.34 [9]			.36 [9]
YA28L2TC38E2				3/8	M10			.75 [19]	.41 [10]	2.97 [75]	.41 [10]			.42 [11]
YA282L				3/8	M10			1.00 [25]	.41 [10]	3.22 [82]	.41 [10]			.42 [11]
YA28L2TC38				3/8	M10			1.00 [25]	.41 [10]	3.22 [82]	.41 [10]			.42 [11]
YA282LN				1/2	M12			1.75 [44]	.56 [14]	4.41 [112]	.63 [16]			.64 [16]
YA28L2TC38E10				3/8	M10	.88 [22]	1.02 [26]	1.25 [32]	.41 [10]	3.47 [88]	.41 [10]	.69 [18]	.14 [4]	.42 [11]

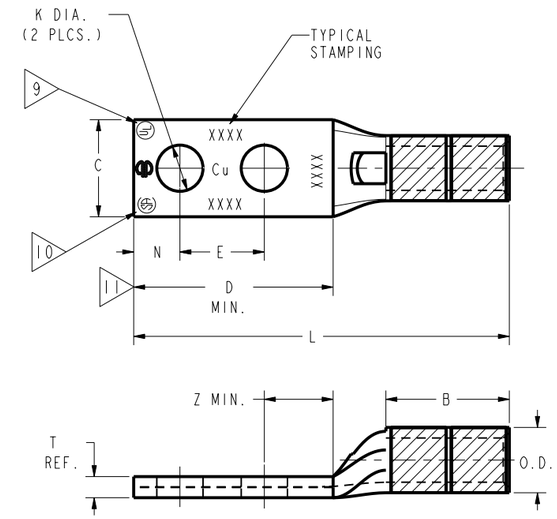

INSTALLATION TOOLING (# CRIMPS)

CATALOG NO.	COLOR CODE	DIE INFORMATION		MECHANICAL				HYDRAULIC						DIELESS (# CRIMPS)	WIRE STRIP LENGTH
		DIE INDEX	TYPE	YIMRTC 6	OUR840	MD6 MD7	MD6--R2 MD7-34R	Y34A 8 Y34B Y34BH	Y35,Y39 Y750, PAT750 5	Y46 4 5 PAT46	Y45 3 5	Y48B	Y60BHU		
YA27 SERIES	ORANGE	14	ORANGE DIE SET	-----	X27RT(3)	W27RT(2) W27VT(2)	W27RT(2) W27VT(2)	-----	U27RT(1)	U27RT(1)	U27RT(1)	-----	-----	MECHANICAL: MRC840(2) MY29-3(1) MY29-11(1)	1-1/16"
			NEST	-----	-----	-----	-----	B27D(1) A27D(1)	U27D-1(1)	U27D-1(1)	U27D-1(1)	-----	-----		
			INDENTOR					Y34PR	Y34PR	Y34PR	Y34PR				
YA28 SERIES	PURPLE	15	PURPLE DIE SET	-----	X28RT(3)	W28RT(2) W28VT(2)	W28RT(2) W28VT(2)	-----	U28RT(1)	U28RT(1)	U28RT(1)	C28R(1)	L28RT(1)	HYDRAULIC: Y81KFT(2) Y4PC834(2) Y644(1)	1-1/8"
			NEST	-----	-----	-----	-----	B28D(1) A28D(1)	U28D-1(1)	U28D-1(1)	U28D-1(1)	C28D(1)	-----		
			INDENTOR					Y34PR	Y34PR	Y34PR	Y34PR	Y48PR			

NOTES:

1. MATERIAL: COPPER TUBING.
2. FINISH: TIN PLATED.
3. CATALOG # PT6515 ADAPTOR IS REQUIRED TO USE "U" DIES IN Y45 SERIES TOOLS.
4. CATALOG # PUADP-1 ADAPTOR IS REQUIRED TO USE "U" DIES IN Y46 SERIES TOOLS.
5. Y35P3 INDENTOR ADAPTOR REQUIRED FOR Y34PR INDENTOR.
6. PERMANENT DIE IN TOOING.
7. DIMENSIONS IN BRACKETS [ ] ARE IN MILLIMETERS ROUNDED OFF TO THE NEAREST MILLIMETER, UNLESS OTHERWISE NOTED, AND ARE FOR REFERENCE ONLY.
8. FOR USE BY CUSTOMERS THAT HAVE THIS HYPRESS™ NO NEW Y34A HYPRESS™ TOOLS ARE BEING PROCESSED. Y34A USES A--D TYPE NEST DIES.
9. CONNECTORS ARE UL LISTED; UNDRILLED VERSIONS ARE NOT UL LISTED.
10. CONNECTORS ARE CSA CERTIFIED; UNDRILLED VERSIONS ARE NOT CSA CERTIFIED.
11. FOR UNDRILLED VERSIONS ADD SUFFIX "-U" TO END OF CATALOG NUMBER. FOR UNDRILLED VERSIONS, USE D MIN. = N MAX. + E MIN. + Z MIN.
12. "X", "W-RT", "W-VT", "U", & "L" DIE SETS ARE COLOR CODED. "A", "B", AND "C" DIES ARE NOT COLOR CODED. NESTS AND INDENTOR TYPE ARE NOT COLOR CODED.

CONNECTOR SIZE	TOLERANCES						
	B	C	E	K DIA.	L	N	O.D.
-8C THRU -25	±.06	±.04	±.02	±.02	±.09	±.03	±.01
-26 THRU -34	±.08	±.04	±.02	±.02	±.12	±.03	±.01
-35 AND UP	±.09	±.06	±.02	±.02	±.15	±.06	±.01

TOLERANCE BLOCK

REFERENCE: SE209512
SUPERSEDES: SC91923

TO ORDER BURNDY® PRODUCTS CALL

UNITED STATES
1-800-346-4175 (LONDONDERRY, NH)

CANADA:
1-800-361-6975 (QUEBEC)
1-800-387-6487 (ALL OTHER PROVINCES)

FOR PRODUCT INFO: http://www.burndy.com

HYLUG™ (COPPER)

ITEM NO:	N/A	
CAT. NO:	YA--2L-, YA--2TC-	(TABLE)
DRAWN BY:	J.MICHAUD	11/16/94
CHECKER:	D.FILLION	11/16/94
DSN APPVL:	C.PALAGI	10/24/94
MFG APPVL:	--	--
QA APPVL:	C.ACKERMAN	11/17/94
MKT APPVL:	T.NELSON	11/10/94
PROD FAM:	CM&R COMPRESSION	
PROJECT #:	--	
DOCUMENT TYPE:	Sales	
REL LEVEL:	Released	
SIZE	D	
DRAWING NO	SD035209	
REV	E	
SCALE:	NTS	
SHEET	8 OF 18	

REV: PE0200