DRAWING NO.
SD013778

REV	DATE	DESCRIPTION	ECO	BY	C'H'K.
D	11/06/17	FORMAT CHANGE	47985	BK	MB

CATALOG NO.	A						AA								B		Y		J		L		W		"U" BOLT	TORQUE	
	ROD SIZES ACCOMMODATED			PIPE SIZES ACCOMMODATED			COPPER CONDUCTOR ACCOMMODATED																				
	NOMINAL DIAMETER (in)	ACTUAL DIAMETER		NOMINAL DIAMETER (in)	ACTUAL DIAMETER		AWG				METRIC WIRE SIZE																
							MIN		MAX		MIN		MAX														
		(in)	(mm)		(in)	(mm)	SIZE	DIA	SIZE	DIA	SIZE	DIA	SIZE	DIA	(in)	(mm)	(in)	(mm)	(in)	(mm)	(in)	(mm)	(in)	(mm)		Lb•in	N•m
GP114C	1/2	0.500	[13]	1/4	0.540	[14]	8 SOL	0.129	4 STR	0.232	10mm² SOL	[3.6]	16mm² STR	[5.1]	1.50	[38]	1.88	[48]	3/8	[10]	1.31	[33]	1.88	[48]	271	240	27.0
GP1126	1/2	0.500	[13]	1/4	0.540	[14]	4 SOL	0.204	2/0 STR	0.416	25mm² STR	[6.5]	50mm² STR	[9.3]	1.50	[38]	1.88	[48]	3/8	[10]	1.69	[43]	1.88	[48]	271	240	27.0
GP1129	1/2	0.500	[13]	1/4	0.540	[14]	2/0 SOL	0.365	250 KCMIL	0.575	70mm² STR	[10.9]	120mm² STR	[14.4]	1.75	[44]	1.88	[48]	3/8	[10]	1.94	[49]	1.88	[48]	271	240	27.0
GP644C	5/8 - 3/4	0.625 - 0.750	[16 - 19]	3/8	0.675	[17]	8 SOL	0.129	4 STR	0.232	10mm² SOL	[3.4]	16mm² STR	[5.1]	1.50	[38]	2.06	[52]	3/8	[10]	1.31	[33]	2.12	[54]	187	240	27.0
GP6426	5/8 - 3/4	0.625 - 0.750	[16 - 19]	3/8	0.675	[17]	4 SOL	0.204	2/0 STR	0.416	25mm² STR	[6.5]	50mm² STR	[9.3]	1.50	[38]	2.06	[52]	3/8	[10]	1.69	[43]	2.12	[54]	187	240	27.0
GP6429	5/8 - 3/4	0.625 - 0.750	[16 - 19]	3/8	0.675	[17]	2/0 SOL	0.365	250 KCMIL	0.575	70mm² STR	[10.9]	120mm² STR	[14.4]	1.75	[44]	2.06	[52]	3/8	[10]	2.06	[52]	2.12	[54]	242	240	27.0
GP6434	5/8 - 3/4	0.625 - 0.750	[16 - 19]	3/8	0.675	[17]	300 KCMIL	0.63	500 KCMIL	0.814	185mm² STR	[17.8]	240mm² STR	[20.3]	2.00	[51]	2.56	[65]	1/2	[13]	2.56	[65]	2.56	[65]	254	480	54.1
GP6439	5/8 - 3/4	0.625 - 0.750	[16 - 19]	3/8	0.675	[17]	550 KCMIL	0.855	750 KCMIL	0.998	300mm² STR	[22.6]	400mm² STR	[26.1]	2.00	[51]	2.56	[65]	1/2	[13]	2.94	[75]	2.56	[65]	254	480	54.1
GP144C	1	1.000	[25]	1/2 - 3/4	0.84 - 1.050	[21 - 27]	8 SOL	0.129	4 STR	0.232	10mm² SOL	[3.6]	16mm² STR	[5.1]	1.50	[38]	1.81	[46]	3/8	[10]	1.94	[49]	2.38	[60]	222	240	27.0
GP1426	1	1.000	[25]	1/2 - 3/4	0.84 - 1.050	[21 - 27]	4 SOL	0.204	2/0 STR	0.416	25mm² STR	[6.5]	50mm² STR	[9.3]	1.50	[38]	1.81	[46]	3/8	[10]	1.69	[43]	2.38	[60]	249	240	27.0
GP1429	1	1.000	[25]	1/2 - 3/4	0.84 - 1.050	[21 - 27]	2/0 SOL	0.365	250 KCMIL	0.575	70mm² STR	[10.9]	120mm² STR	[14.4]	1.75	[44]	2.13	[54]	3/8	[10]	1.94	[49]	2.38	[60]	249	240	27.0
GP1434	1	1.000	[25]	1/2 - 3/4	0.84 - 1.050	[21 - 27]	300 KCMIL	0.63	500 KCMIL	0.814	185mm² STR	[17.8]	240mm² STR	[20.3]	2.00	[51]	2.69	[68]	1/2	[13]	2.56	[65]	2.75	[70]	247	480	54.1
GP1439	1	1.000	[25]	1/2 - 3/4	0.84 - 1.050	[21 - 27]	550 KCMIL	0.855	750 KCMIL	0.998	300mm² STR	[22.6]	400mm² STR	[26.1]	2.12	[54]	2.69	[68]	1/2	[13]	2.94	[75]	2.75	[70]	247	480	54.1
GP1444	1	1.000	[25]	1/2 - 3/4	0.84 - 1.050	[21 - 27]	800 KCMIL	1.031	1000 KCMIL	1.152	400mm² STR	[26.1]	500mm² STR	[28.3]	2.25	[57]	3.44	[87]	1/2	[13]	3.31	[84]	2.75	[70]	-	480	54.1
GP154C	1 1/8 - 1 1/4	1.125 - 1.250	[29 - 32]	1	1.315	[33]	8 SOL	0.129	4 STR	0.232	10mm² SOL	[3.6]	16mm² STR	[5.1]	1.75	[44]	1.81	[46]	3/8	[10]	1.94	[49]	2.63	[67]	191	240	27.0
GP1526	1 1/8 - 1 1/4	1.125 - 1.250	[29 - 32]	1	1.315	[33]	4 SOL	0.204	2/0 STR	0.416	25mm² STR	[6.5]	50mm² STR	[9.3]	1.75	[44]	1.81	[46]	3/8	[10]	1.69	[43]	2.63	[67]	244	240	27.0
GP1529	1 1/8 - 1 1/4	1.125 - 1.250	[29 - 32]	1	1.315	[33]	2/0 SOL	0.365	250 KCMIL	0.575	70mm² STR	[10.9]	120mm² STR	[14.4]	1.75	[44]	2.31	[59]	3/8	[10]	1.94	[49]	2.63	[67]	244	240	27.0
GP1534	1 1/8 - 1 1/4	1.125 - 1.250	[29 - 32]	1	1.315	[33]	300 KCMIL	0.63	500 KCMIL	0.814	185mm² STR	[17.8]	240mm² STR	[20.3]	2.19	[56]	2.31	[59]	1/2	[13]	2.56	[65]	3	[76]	311	480	54.1
GP1539	1 1/8 - 1 1/4	1.125 - 1.250	[29 - 32]	1	1.315	[33]	550 KCMIL	0.855	750 KCMIL	0.998	300mm² STR	[22.6]	400mm² STR	[26.1]	2.19	[56]	2.31	[59]	1/2	[13]	2.94	[75]	3	[76]	311	480	54.1
GP1544	1 1/8 - 1 1/4	1.125 - 1.250	[29 - 32]	1	1.315	[33]	800 KCMIL	1.031	1000 KCMIL	1.152	400mm² STR	[26.1]	500mm² STR	[28.3]	2.25	[57]	2.31	[59]	1/2	[13]	3.31	[84]	3	[76]	311	480	54.1
GP164C	1 3/8 - 1 1/2	1.375 - 1.500	[35 - 38]	1 1/4	1.660	[42]	8 SOL	0.129	4 STR	0.232	10mm² SOL	[3.6]	16mm² STR	[5.1]	1.88	[48]	2.31	[59]	3/8	[10]	1.31	[33]	3	[76]	204	240	27.0
GP1626	1 3/8 - 1 1/2	1.375 - 1.500	[35 - 38]	1 1/4	1.660	[42]	4 SOL	0.204	2/0 STR	0.416	25mm² STR	[6.5]	50mm² STR	[9.3]	1.88	[48]	2.31	[59]	3/8	[10]	1.69	[43]	3	[76]	204	240	27.0
GP1629	1 3/8 - 1 1/2	1.375 - 1.500	[35 - 38]	1 1/4	1.660	[42]	2/0 SOL	0.365	250 KCMIL	0.575	70mm² STR	[10.9]	120mm² STR	[14.4]	1.88	[48]	2.31	[59]	3/8	[10]	1.94	[49]	3	[76]	204	240	27.0
GP1629W	1 3/8 - 1 1/2	1.375 - 1.500	[35 - 38]	1 1/4	1.660	[42]	2/0 SOL	0.365	250 KCMIL	0.575	70mm² STR	[10.9]	120mm² STR	[14.4]	1.88	[48]	2.31	[59]	3/8	[10]	1.94	[49]	3	[76]	204	240	27.0 5
GP1634	1 3/8 - 1 1/2	1.375 - 1.500	[35 - 38]	1 1/4	1.660	[42]	300 KCMIL	0.63	500 KCMIL	0.814	185mm² STR	[17.8]	240mm² STR	[20.3]	2.19	[56]	2.88	[73]	1/2	[13]	2.56	[65]	3.38	[86]	256	480	54.1
GP1639	1 3/8 - 1 1/2	1.375 - 1.500	[35 - 38]	1 1/4	1.660	[42]	550 KCMIL	0.855	750 KCMIL	0.998	300mm² STR	[22.6]	400mm² STR	[26.1]	2.44	[62]	3.56	[90]	5/8	[16]	3.94	[100]	3.69	[94]	359	660	74.4
GP1644	1 3/8 - 1 1/2	1.375 - 1.500	[35 - 38]	1 1/4	1.660	[42]	800 KCMIL	1.031	1000 KCMIL	1.152	400mm² STR	[26.1]	500mm² STR	[28.3]	2.63	[67]	3.56	[90]	5/8	[16]	3.44	[87]	3.75	[95]	359	660	74.4

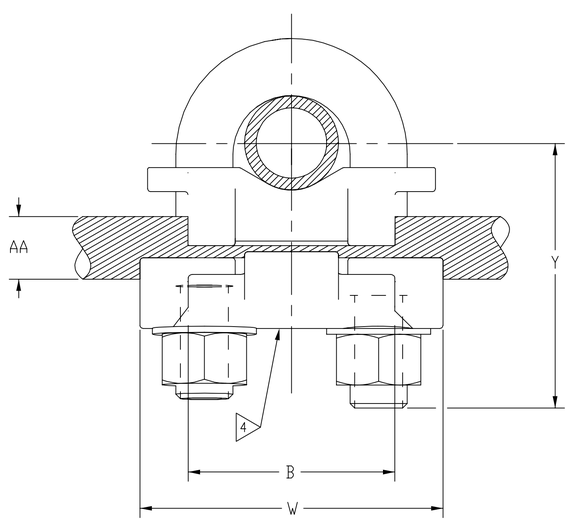

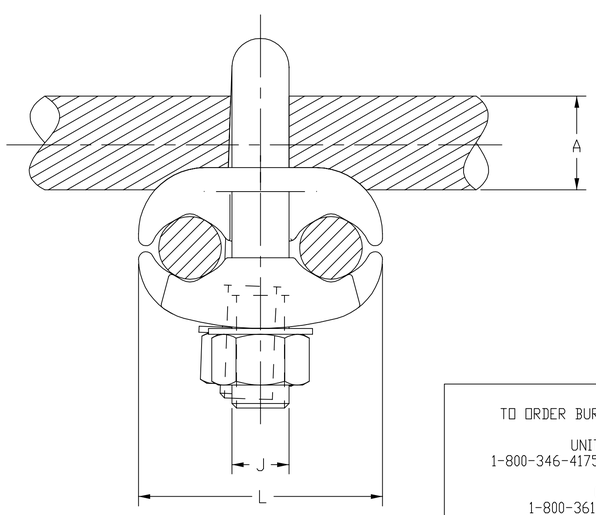

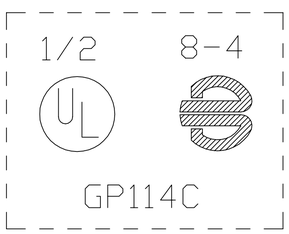

LETTERING VIEW

NOTES:

1. MATERIAL: COPPER ALLOY
2. UL 467 LISTED, FILE NO.E9999 ACCEPTABLE FOR DIRECT BURIAL.
3. DIMENSIONS IN BRACKETS [ ] ARE IN MILLIMETERS AND ARE FOR REFERENCE ONLY.

4 LETTERING TO APPEAR ON THIS SIDE OF CONNECTOR.

5 CATALOG NUMBERS WITH A SUFFIX "W" ARE TIN PLATED.

6 AMPERE RATING FOR CONNECTOR SHOULD BE BASED ON THE SMALLEST SIZE CONDUCTOR.

TO ORDER BURNDY® PRODUCTS CALL

UNITED STATES
1-800-346-4175 (LONDONDERRY, NH)

CANADA:
1-800-361-6975 (QUEBEC)
1-800-387-6487 (ALL OTHER PROVINCES)

FOR PRODUCT INFO: http://www.burndy.com

GROUND CLAMP				
ITEM NO:	N/A			
CAT. NO:	GP-- (TABLE)			
DRAWN BY:	JJB	11/24/45	BURNDY	
CHECKER:	AEB	01/21/46		
DSN APPVL:	G.DITROIA	11/11/94		
MFG APPVL:	--	--		
QA APPVL:	A.LLOYD	12/03/94		
MKT APPVL:	K.WOO	11/11/94	SCALE:	1:1
PROD FAM:	--		DRAWING NO	REV
PROJECT #:	--	SIZE	SD013778	D
DOCUMENT TYPE:	Sales	D		
REL LEVEL:	Released		SHEET 1 OF 2	

REV: PE0200