THIS COPY IS PROVIDED ON A RESTRICTED BASIS AND IS NOT TO BE USED IN ANY WAY DETRIMENTAL TO THE INTERESTS OF PANDUIT CORP.

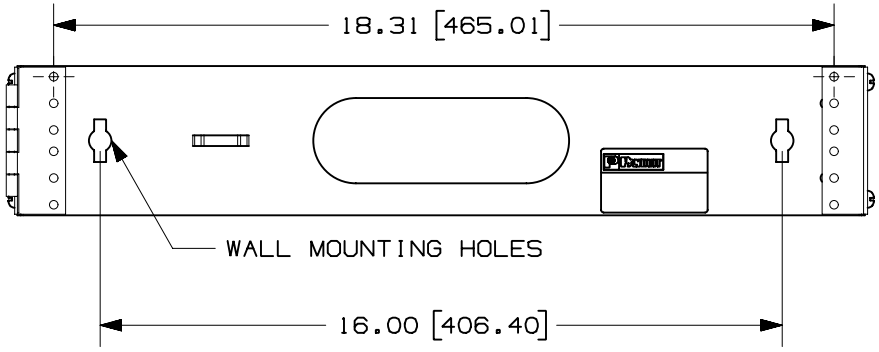

PANDUIT P/N	WEIGHT
WBH2	3.8 LBS/EACH 1723 g/EACH

NOTES:
1. VISIT OUR ON-LINE CATALOG AT WWW.PANDUIT.COM FOR A CURRENT LIST OF PRODUCTS APPLICABLE FOR USE WITH THIS PART.
2. COMPONENTS:
   1- WBH2
   4- #12-24 X 1/2" SCREWS
3. DIMENSIONS IN PARENTHESIS ARE METRIC.

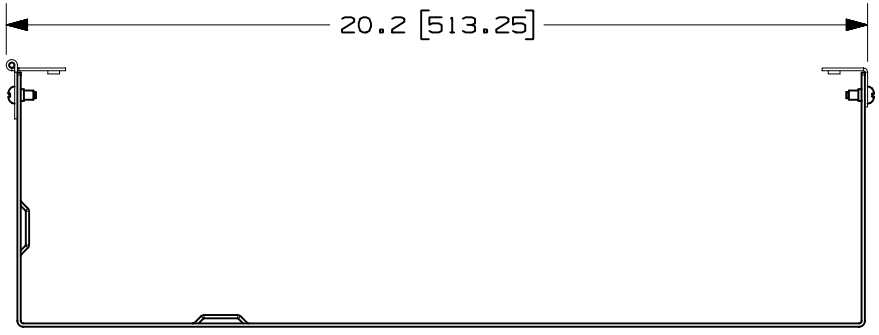

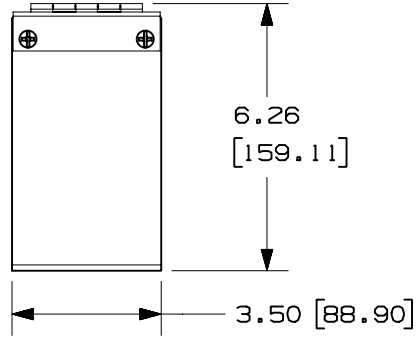

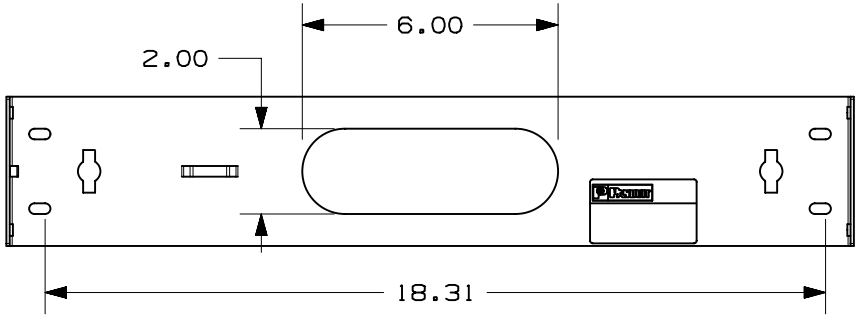

MODEL FILENAME: D35331AA_WBH2_01.PRT

CAD FILENAME/LAYERS: D35331AA_DC_01A.PRT

PANDUIT CORP. TINLEY PARK, ILLINOIS

WBH2 CUSTOMER DRAWING

UNLESS OTHERWISE SPECIFIED, DIMENSIONAL TOLERANCES ARE:
(.X) ± .03 (.XXX) ± .005
(.XX) ± .015 ANGLES ± 1°

UNLESS OTHERWISE SPECIFIED, ALL DIMENSIONS ARE GIVEN IN INCHES, THIRD ANGLE PROJECTION.

REV	DATE	BY	CHK	DESCRIPTION	ECN - R	CUST	SUP	OTH
R	10-28-03	JDWE		RELEASED TO PRODUCTION	35331-26			

DRAWN BY: JDWE

DATE: 10-28-03

CHK'D:

MAT'L: STEEL- POWDER COATED BLACK

SCALE: NONE

DRAWING NO.: 35331-26

DWG SIZE: A