THIS COPY IS PROVIDED ON A RESTRICTED BASIS AND IS NOT TO BE USED IN ANY WAY DETRIMENTAL TO THE INTERESTS OF PANDUIT CORP.

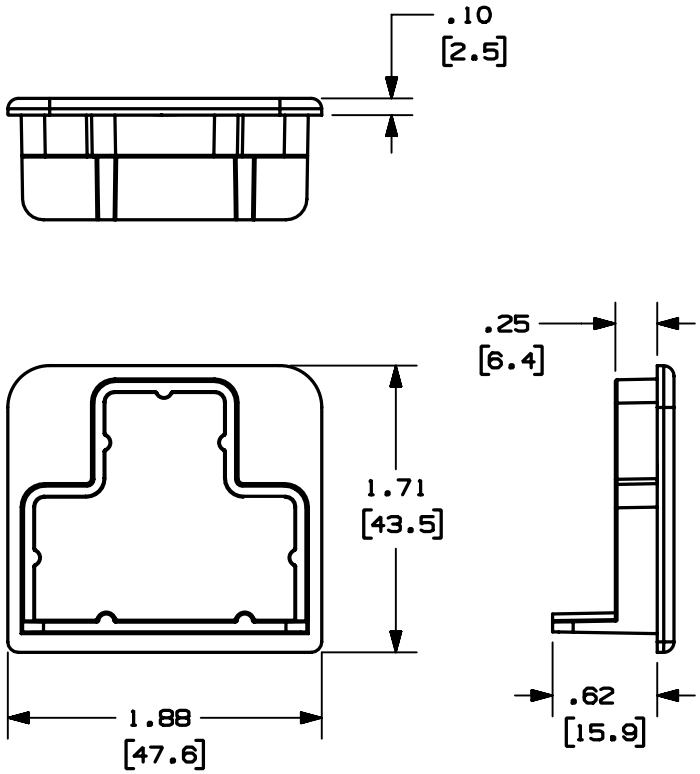

PANDUIT PART NO.	WEIGHT
OFR20EC	.13 lbs / EACH (59.0 g / EACH)

NOTES:

1. SEE CURRENT CATALOG FOR ADDITIONAL PART NUMBER SUFFIXES TO INDICATE COLOR AND/OR PACKAGE QUANTITY.
2. DIMENSIONS IN PARENTHESES ARE IN METRIC.

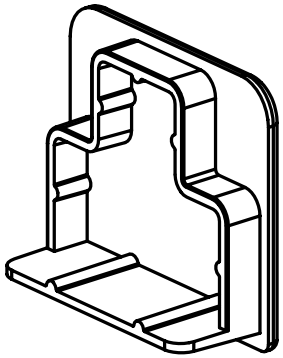

REV	DATE	BY	CHK	DESCRIPTION	ECN	CHK	CUST	SUP
2	04-28-03	JBN	JBN	RELEASED TO PRODUCTION	38546-02	RGRO	RGRO	
1	03-13-03	JBN	JBN	A. REVISED PART NUMBER: OFR20EC WAS OFR35EC				
R	08-20-02	JBN	JBN	DRAWING RELEASED				

CAD FILENAME/LAYERS: D38546BB_DC_OFR20EC_01B.PRT

PANDUIT CORP. TINLEY PARK, ILLINOIS

OFFICE FURNITURE HORIZONTAL RACEWAY END CAP (OFR20EC)

A

CUSTOMER DRAWING

UNLESS OTHERWISE SPECIFIED, DIMENSIONAL TOLERANCES ARE:
(.X) ± (.XXX) ±
(.XX) ± .03 [.8] ANGLES ±

UNLESS OTHERWISE SPECIFIED, ALL DIMENSIONS ARE GIVEN IN INCHES, THIRD ANGLE PROJECTION.

DRAWN BY: JBN
DATE: 08-30-02
CHK'D: JBN
MAT'L: PVC
SCALE: NONE
DRAWING NO.: 38546-02
DWG SIZE: A