THIS COPY IS PROVIDED ON A RESTRICTED BASIS AND IS NOT TO BE USED IN ANY WAY DETRIMENTAL TO THE INTERESTS OF PANDUIT CORP.

PANDUIT PART NUMBER	WEIGHT	VOLUME CU.IN./CC
JBP3D	A 0.57 LB/PC [257.5 g/PC]	81.6 [1337]

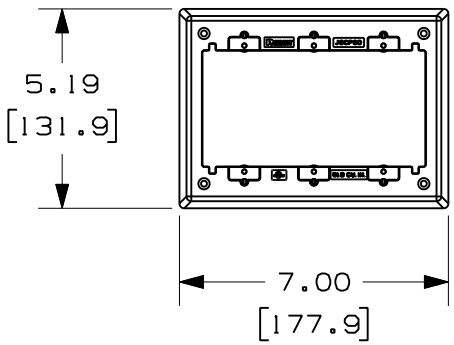

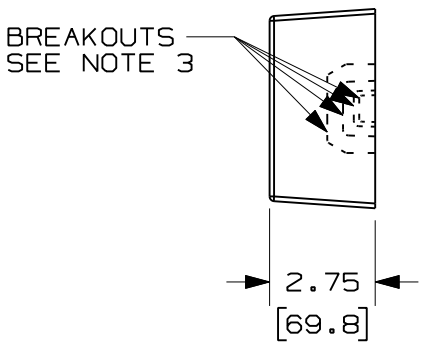

NOTES:

1. SEE CURRENT CATALOG FOR ADDITIONAL PART SUFFIXES TO INDICATE COLOR AND OR PACKAGE QUANTITY.
2. CONCENTRIC BREAKOUTS TO ACCOMMODATE CONDUIT SIZES OF 1/2", 3/4", AND 1" DIAMETERS.
3. BREAKOUTS ARE PROVIDED ON ALL FOUR SIDES OF COVER FOR T45, LDS, PD, LDPH & LD RACEWAYS.
4. DIMENSIONS IN PARENTHESES ARE IN METRIC.

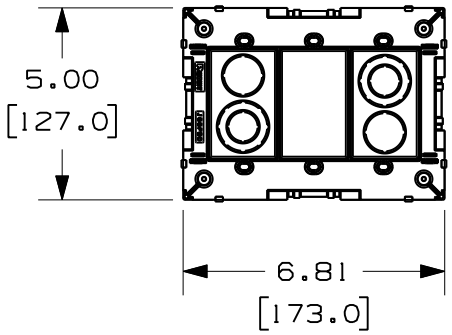

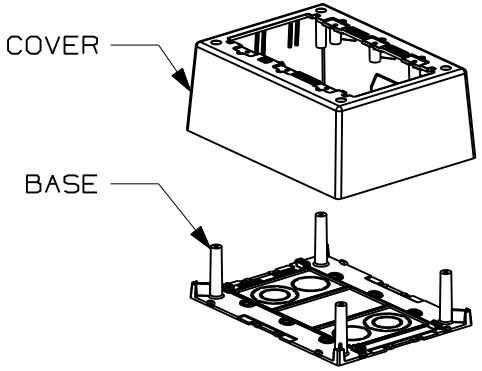

REV	DATE	BY	CHK	DESCRIPTION	ECN	CHK	CUST	SUP
--	--------	----	----	RELEASED TO PRODUCTION	----------	----	----	
1	06.03.11	RMHI	RMHI	A. PART WEIGHT EST REVISED TO ACTUALS	10Y003BA-DC	RMHI	RTFI	
R	03.17.11	BDK	RMHI	DRAWING RELEASED				

CAD FILENAME/LAYERS 10Y003BA_DC_JBP3D/00B

PANDUIT CORP TINLEY PARK, ILLINOIS

PAN-WAY 3 GANG DEEP JUNCTION BOX (JBP3D)

CUSTOMER DRAWING

UNLESS OTHERWISE SPECIFIED, DIMENSIONAL TOLERANCES ARE: (.X) ± (.XX) ± .03 [.8] (.XXX) ± ANGLES ±

UNLESS OTHERWISE SPECIFIED, ALL DIMENSIONS ARE GIVEN IN INCHES. THIRD ANGLE PROJECTION

DRAWN BY	MAT'L/COLOR:	SCALE
BDK	PVC	N.T.S.
DATE 03.17.11		DRAWING NO. 10Y003BA-DC
CK'D RMHI		DWG A SIZE