THIS COPY IS PROVIDED ON A RESTRICTED BASIS AND IS NOT TO BE USED IN ANY WAY DETRIMENTAL TO THE INTERESTS OF PANDUIT CORP.

| PANDUIT PART NO. | WEIGHT |
|---|---|
| DIFBA3003S00S | 9.2 LBS/EACH |

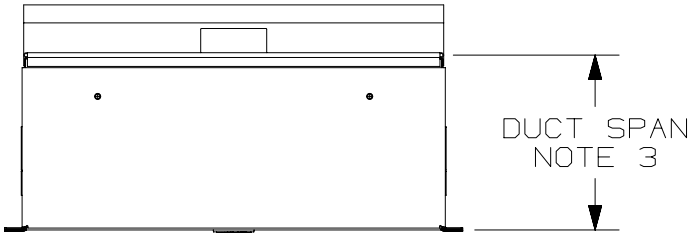


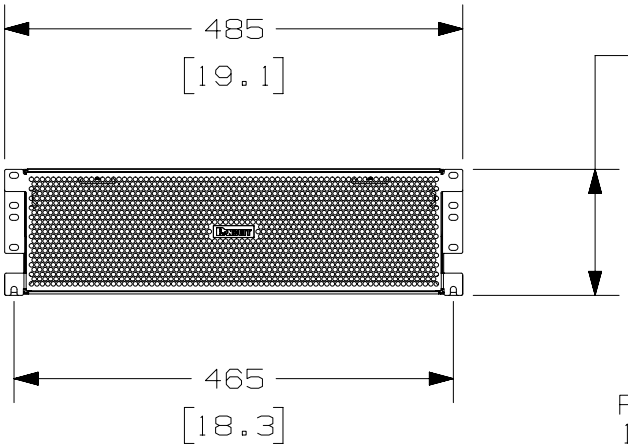


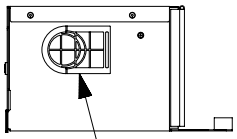


NOTES:
1. PRIMARY DIMENSIONS ARE MILLIMETERS (mm). DIMENSIONS IN PARENTHESES ARE IN INCHES (IN)
2. PARTS SUPPLIED
   1 - 3 RU DUCT
   1 - FRONT PERF PLATE
   1 - HARDWARE KIT
3. SLIDE BRACKET EXTENDS TO PROVIDE A SPAN (WITH CONSIDERATION FOR SEALS) OF 175.6mm [6.91"] - 200.9mm [7.91"] TO ACCOMODATE A SWITCH MOUNTING DEPTH OF 29" TO 30".
4. 2 RUBBER GROMMETS (1 ON EACH SIDE) PROVIDED FOR EASY ACCESS TO POWER.

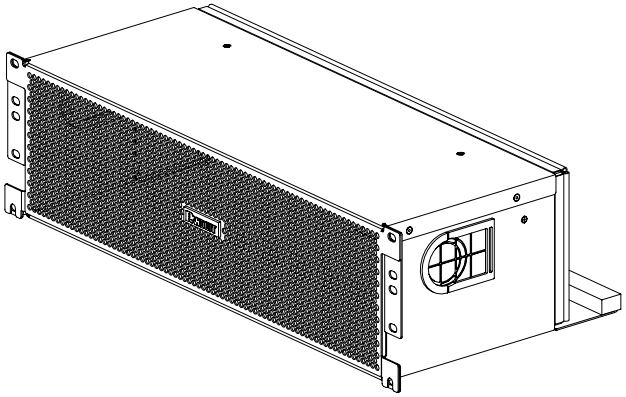

| REV | DATE | BY | CHK | APR | DESCRIPTION | ECN |
|---|---|---|---|---|---|---|
| 00A | 8/29/14 | TGO | | | RELEASED | 10V168WZ |

TITLE
INLET DUCTING FOR CISCO 93128 SWITCH
DIFBA3003S00S
CONTROL DRAWING

ITEM REVISION NAME: 10V168WZ/00

DATASET FILE NAME: 10V168WZ_DC/00A

PANDUIT

MATERIAL: N/A

THIRD ANGLE PROJECTION

DRAWING NUMBER: 10V168WZ-DC

| DRAWN BY | DATE | CHK | SCALE | | SIZE |
|---|---|---|---|---|---|
| TGO | 08/29/14 | | NONE | SHT 1 OF 1 | A |