THIS COPY IS PROVIDED ON A RESTRICTED BASIS AND IS NOT TO BE USED IN ANY WAY DETRIMENTAL TO THE INTERESTS OF PANDUIT CORP.

NOTES:
1. IDENTIFICATION: PATCH PANEL BEND RADIUS CLIP

PART NO.	COLOR
CMBRC1	BLACK

2. COMPONENTS:
   (2) BEND RADIUS CLIPS
3. MAINTAINS A 1/2" BEND RADIUS.
4. DIMENSIONS IN PARENTHESIS ARE METRIC.
5. CAN BE USED WITH ANY EIA STANDARD RACK.
6. CAPACITY: 16 CAT 5e PATCH CORDS

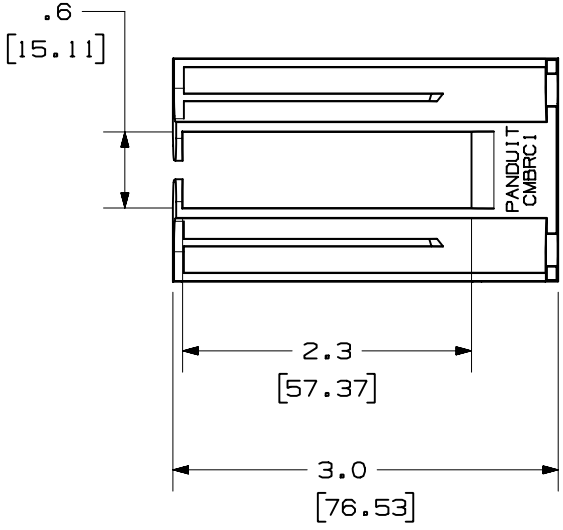

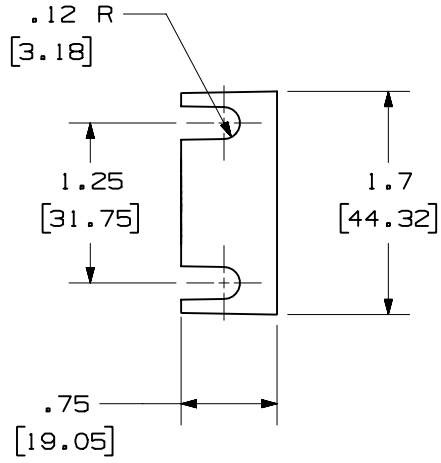

PANDUIT P/N	WEIGHT
CMBRC1	.03 LBS/EACH 14 g/EACH

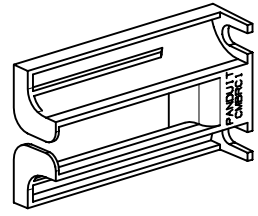

REV	DATE	BY	CHK	DESCRIPTION	ECN - R	CUST	SUP	OTH
R	3-12-02	JDWE		RELEASED TO PRODUCTION	10057-02			

MODEL FILENAME: M10057LC_ZERO_RUCLIP_01.PRT

CAD FILENAME/LAYERS: M10057LC_DC_01A.PRT

PANDUIT CORP. TINLEY PARK, ILLINOIS

PATCH PANEL BEND RADIUS CLIP
(CMBRC1) CUSTOMER DRAWING

UNLESS OTHERWISE SPECIFIED,
DIMENSIONAL TOLERANCES ARE:
(.X) ± .03 (.XXX) ± .005
(.XX) ± .015 ANGLES ± 1°

UNLESS OTHERWISE SPECIFIED,
ALL DIMENSIONS ARE GIVEN
IN INCHES, THIRD ANGLE PROJECTION.

DRAWN BY: JDWE

DATE: 3-12-02

CHK'D:

MAT'L: PVC

SCALE: 3/4

DRAWING NO.: 10057-02

DWG SIZE: A