THIS COPY IS PROVIDED ON A RESTRICTED BASIS AND IS NOT TO BE USED IN ANY WAY DETRIMENTAL TO THE INTERESTS OF PANDUIT CORP.

NOTES:

1. RACK GROUNDING EQUIPMENT JUMPER KIT PART NUMBER: RGEJ1036PFY, RGEJ1096PF
2. ALL COMPONENTS THAT MAKE UP THIS KIT ARE RoHS COMPLIANT.

LISTED
GROUNDING AND BONDING EQUIPMENT

CERTIFIED

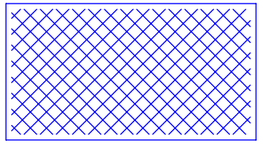

CLEANING PAD (QTY. 1)

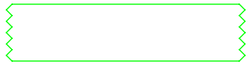

5cc TUBE ANTI-OXIDANT PASTE (QTY. 1)

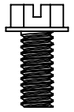

#12-24, M6, #10-32, & M5
SLOTTED HEX-HEAD ZINC PLATED
THREAD-FORMING SCREW (QTY. 2 OF EACH)

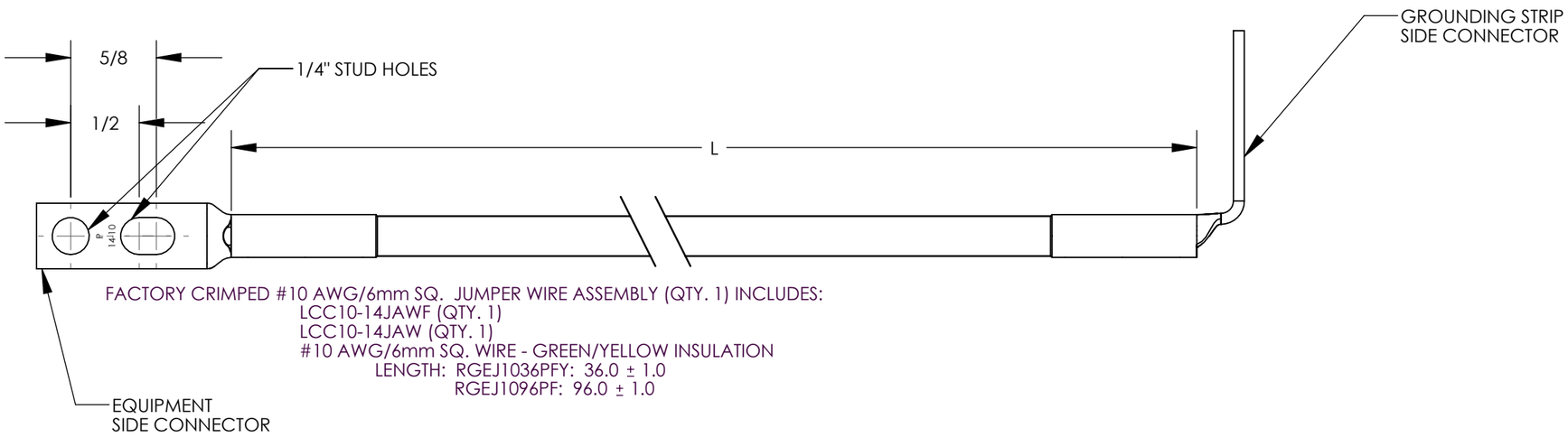

REV	DATE	BY	CHK	DESCRIPTION	ECN	-R	SUP
03	12/12	JHNU	RGB	ADDED RGEJ1096PF	N41645BB-C41645	RGB	RGB
02	9/06	JHNU	CSH	REVISED NOTE 2: ADDED PACKAGE & CARTON WEIGHT	PC00542		
01	3/06	JHNU	CSH	REMOVED CE SYMBOL FROM DRAWING	PC00362		
00	2/06	JHNU	CSH	DRAWING RELEASED	PC00325		

PANDUIT CORP. TINLEY PARK, ILLINOIS

EQUIPMENT JUMPER
(RGEJ1036PFY, RGEJ1096PF)
CUSTOMER DRAWING

UNLESS OTHERWISE SPECIFIED DIMENSIONAL TOLERANCES ARE:
(.X) ± (.XXX) ±
(.XX) ± ANGLES ±

UNLESS OTHERWISE SPECIFIED, ALL DIMENSIONS ARE GIVEN IN INCHES, THIRD ANGLE PROJECTION

DRAWN BY JHNU
MAT'L:
DATE 2/06
CHK'D

SCALE NONE
DRAWING NO / CAD FILE C41645_03
DWG B SIZE