THIS COPY IS PROVIDED ON A RESTRICTED BASIS AND IS NOT TO BE USED IN ANY WAY DETRIMENTAL TO THE INTERESTS OF PANDUIT CORP.

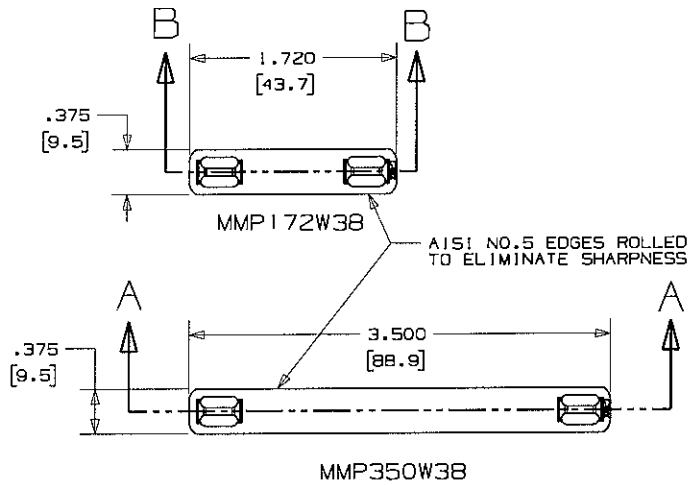

PART NUMBER	MATERIAL	PACKAGING QTY.
MMP350W38-C	304 SS	100
MMP350W38-C316	316 SS	100
MMP172W38-C	304 SS	100
MMP172W38-C316	316 SS	100
MMP350W38-M	304 SS	1000
MMP350W38-M316	316 SS	1000

SECTION A-A
SCALE 1 : 1

SECTION B-B
SCALE 1 : 1

NOTES:

1. DIMENSIONS IN [ ] ARE mm.
2. CUSTOM PERMANENT MARKING AVAILABLE. CONSULT FACTORY.
3. USE WITH STD. CROSS SECTION MLT'S.
4. TOLERANCE (UNLESS OTHERWISE SPECIFIED):
   .XXX = ±.020[.5]
   .XX = ±.03[.8]

REV	DATE	BY	CHK	DESCRIPTION
01B	8/08	JMMR	SKB	ADDED PART NO'S TO PART TABLE FOR BULK QTY 1000 MARKER PLATES
01A	3/08	JMMR	SKB	GENERAL REVISION
00A	9/07	JMMR	SKB	RELEASED

CAD FILENAME/LAYERS: N10843BA_DC/01B

PANDUIT CORP TINLEY PARK, ILLINOIS

3/8 WIDE MARKER PLATES
CUSTOMER DRAWING

UNLESS OTHERWISE SPECIFIED, DIMENSIONAL TOLERANCES ARE: [.XX] ±N/A [.XXXX] ± N/A [.XXX] ±N/A ANGLES ± N/A

UNLESS OTHERWISE SPECIFIED, ALL DIMENSIONS ARE GIVEN IN INCHES, THIRD ANGLE PROJECTION

DRAWN BY: JMMR
DATE: 9/28/07
CHK'D: SKB
MAT'L: N/A
SCALE: FULL
DRAWING NO.: N10843BA_DC
DWG SIZE: B