LEVITON®

Premium CATV Modules

APPLICATION

Leviton's Premium CATV Modules are designed to distribute incoming RF signals (Cable TV, HDTV, Antenna or other modulated sources) to 1, 8 or 16 locations throughout a home or office on coaxial cable. The modules incorporate state-of-the-art bi-directional signaling to support advanced interactive communications via a cable modem or cable box as well as standard CATV, antenna and modulated input from such sources as VCRs, DVDs and security camera/CCTVs. The Premium Line optimizes the performance of digital cable signals to handle advanced technologies offered by cable operators, including delivery of HDTV.

FEATURES

- Digital CATV and HDTV compatible
- High quality, professional-grade
- Distribute CATV, HDTV, antenna, VCR/DVD, Camera/CCTV signals on coaxial cable throughout a home or office
- Provide a bi-directional signal path to support cable modem or cable box communications
- Easily install into Leviton's Structured Media™ enclosures in a vertical or horizontal direction
- Modules tilt for greater ease of installation.
- Robust machine-threaded, gold-plated brass ports meet SCTE requirements
- F-ports provide up to 15 psi weather sealing
- The 360-degree seizing insert retains center conductor up to a pullout tension of 200 grams on .032" diameter coax center conductors.
- Power adapter provides unique small-sized form factor
- Termination caps included (except 1x1 module)
- 1x16 module has a passive cable modem bypass port for VOIP functionality over cable during power outages
- Forward path incorporates a high-quality unity gain amplifier design
- Unamplified return path
- Durable aluminum die-cast housing with white powder coating

47693-01P

47693-08P

47693-16P

Leviton Mfg. Co., Inc.

59-25 Little Neck Pkwy, Little Neck, NY 11362-2591 Tech Line: 1-800-824-3005 Fax: 1-800-832-9538 www.leviton.com

© 2007 Leviton Manufacturing Co., Inc. All rights reserved. Subject to change without notice.

TYPICAL SPECIFICATION

The Premium CATV modules shall distribute RF signals over coaxial cable to 1, 8 or 16 locations. They shall meet all SCTE transmission and connector requirements. They shall feature one cable input and 1, 8 or 16 television outputs. The CATV module shall support bi-directional signal paths for cable modem or cable box communications. They shall also come in tilt-able module designs, with 75 Ohm F-Type connectors and a 12VDC 1A power supply. The manufacturer shall provide a two-year limited product warranty.

PHYSICAL SPECIFICATIONS

Dimensions:	1x1 Premium Module (3.50" H x 6.50" W x 3.58" D)
	1x8 Premium Module (3.50" H x 6.50" W x 3.58" D)
	1x16 Premium Module (3.57" H x 9.16" W x 3.42" D)
Impedance:	75 Ohm
Connector Type:	F-Type Gold Plated
Power input:	12VDC 1A, adapter supplied
Frequency:	52-1000 MHz Forward path
	0-45MHz Reverse Path

ELECTRONIC SPECIFICATIONS

1x1 Premium CATV Module

Parameter	Bandwidth	Forward Path	Return Path
Band	- -	52-1000MHz	5-42MHz
Gain (Loss)	- -	15dB	(-0.5dB)
Flatness	- -	±0.75dB	±1.5dB
Return Loss - Input	- -	22.0dB	21.0dB
Return Loss - Output	- -	22.0dB	21.0dB
Port Isolation - Output	- -	25.0dB	27.0dB
Group Delay (span 3.58Mhz)	54-60MHz	15ns	- -
	61-1000MHz	7ns	- -
Group Delay (span 1Mhz)	5-42 MHz	- -	17ns
	10-40 MHz	- -	7ns

Power to RF Input Isolation	5-1000 MHz	100dB (min)
RFI Isolation	5-1000 MHz	-110dBc
Noise Figure	52-1000 MHz	2.5dB
Distortion*	CSO	-65dBc
	CTB	-74dBc
	Xmod	-75dBc

*Input level at +10dBmV flat 77 channels & 200Mhz noise for QAM test from 550 to 790Mhz

Leviton Mfg. Co., Inc.

59-25 Little Neck Pkwy, Little Neck, NY 11362-2591 Tech Line: 1-800-824-3005 Fax: 1-800-832-9538 www.leviton.com/industrial

Copyright© 2007 Leviton Manufacturing Co., Inc. All rights reserved. Subject to change without notice.

1x8 Premium CATV Module

Parameter	Bandwidth	Forward Path	Return Path
Band	- -	52-1000MHz	5-42MHz
Gain (Loss)	- -	4dB	(-11.0dB)
Flatness	- -	±1.0dB	±1.5dB
Return Loss - Input	- -	22.0dB	21.0dB
Return Loss - Output	- -	20.0dB	21.0dB
Port Isolation - Output	- -	25.0dB	25.0dB
Group Delay (span 3.58Mhz)	54-60MHz	15ns	- -
	61-1000MHz	7ns	- -
Group Delay (span 1Mhz)	5-42 MHz	- -	17ns
	10-40 MHz	- -	7ns

Power to RF Input Isolation	5-1000 MHz	100dB (min)
RFI Isolation	5-1000 MHz	-110dBc
Noise Figure	52-1000 MHz	3.0dB
Distortion*	CSO	-65dBc
	CTB	-74dBc
	Xmod	-75dBc

*Input level at +10dBmV flat 77 channels & 200Mhz noise for QAM test from 550 to 790Mhz

1x16 Premium CATV Module

Parameter	Bandwidth	Forward Path	Return Path
Band	- -	52-1000MHz	5-42MHz
Gain (Loss)	- -	0dB	(-14.5dB)
CM port		- -	(-6.5)
Flatness	- -	±1.5dB	±2.0dB
Return Loss - Input	- -	22.0dB	21.0dB
Return Loss - CM Input	- -	20.0dB	- -
Return Loss - Output	- -	20.0dB	21.0dB
Port Isolation - Output	- -	20.0dB	25.0dB
Port Isolation - CM port to Output port	- -	20.0dB	- -
Group Delay (span 3.58Mhz)	54-60MHz	15ns	- -
	61-1000MHz	7ns	- -
Group Delay (span 1Mhz)	5-42 MHz	- -	17ns
	10-40 MHz	- -	7ns

Power to RF Input Isolation	5-1000 MHz	100dB (min)
RFI Isolation	5-1000 MHz	-110dBc
Noise Figure	52-1000 MHz	3.0dB
Distortion*	CSO	-65dBc
	CTB	-74dBc
	Xmod	-75dBc

*Input level at +10dBmV flat 77 channels & 200Mhz noise for QAM test from 550 to 790Mhz

Leviton Mfg. Co., Inc.
59-25 Little Neck Pkwy, Little Neck, NY 11362-2591 Tech Line: 1-800-824-3005 Fax: 1-800-832-9538 www.leviton.com/industrial
Copyright© 2007 Leviton Manufacturing Co., Inc. All rights reserved. Subject to change without notice.

DIMENSIONAL DRAWINGS

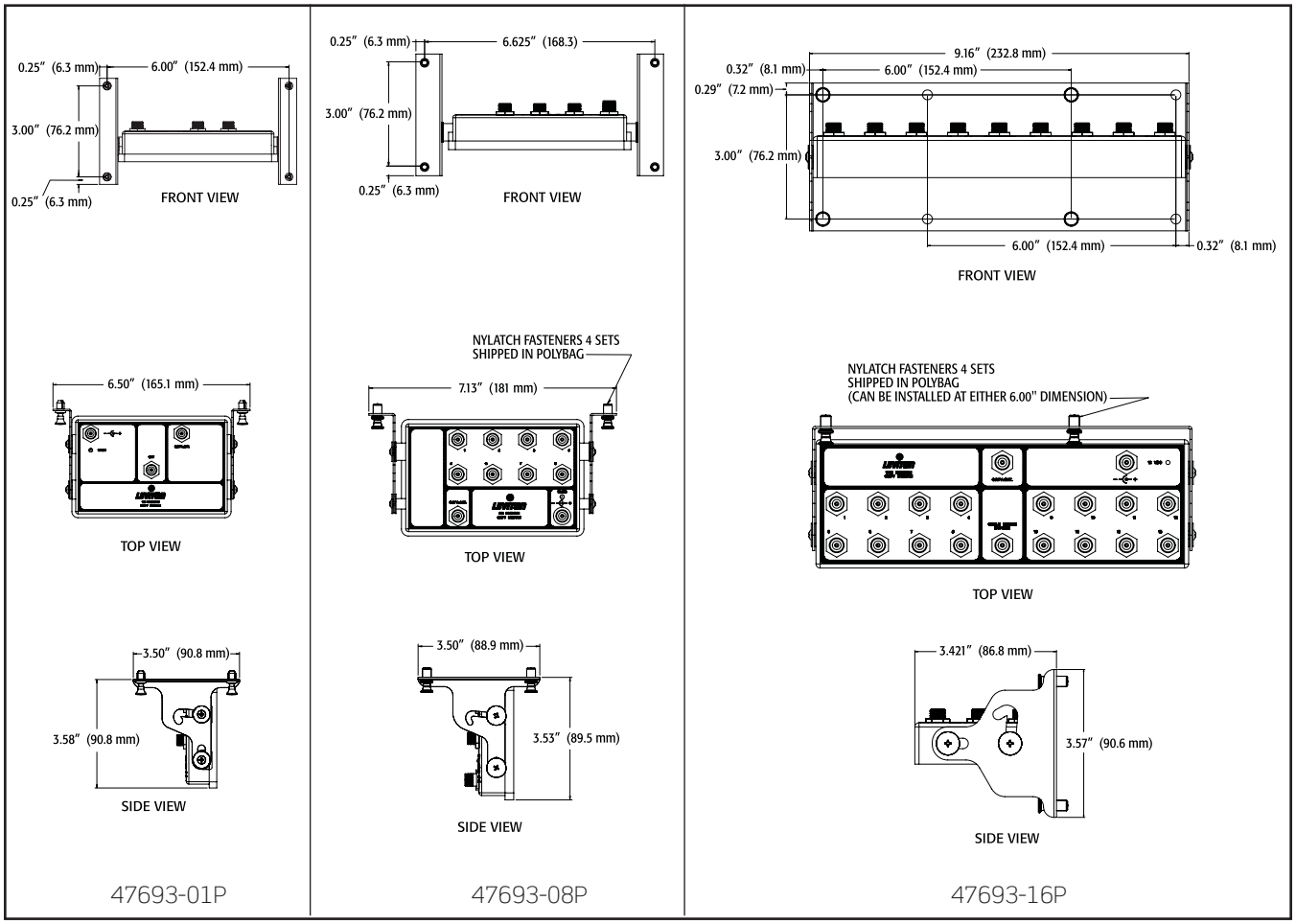

ORDERING INFORMATION

Cat. No.	Description
47693-01P	1x1 Premium CATV Module
47693-08P	1x8 Premium CATV Module
47693-16P	1x16 Premium CATV Module

Leviton Manufacturing Co., Inc.
59-25 Little Neck Parkway, Little Neck, NY 11362-2591
Telephone: 1-800-323-8920 • FAX: 1-800-832-9538 • Tech Line (8:30AM-7:30PM E.S.T. Monday-Friday): 1-800-824-3005

Leviton Manufacturing of Canada, Ltd.
165 Hymus Boulevard, Pointe Claire, Quebec H9R 1E9 • Telephone: 1-800-469-7890 • FAX: 1-800-563-1853

Leviton S. de R.L. de C.V.
Lago Tana 43, Mexico DF, Mexico CP 11290 • Tel. (+52) 55-5082-1040 • FAX: (+52) 5386--1797 • www.leviton.com.mx

Visit our Website at: www.leviton.com

ISO 9001 REGISTERED Quality Manufacturer

© 2007 Leviton Manufacturing Co., Inc. All rights reserved. Subject to change without notice.