HD-TVI Analog PTZ Cameras

1080p Resolution

1080P FULL HD | 960H | HD OVER COAX | TRUE DAY/NIGHT | DWDR | PRIVACY MASK | SMART 3DNR | IR Illumination | 24VAC | IP66 | IK10 | 3 year WARRANTY

OVERVIEW

The TruVision HD-TVI Analog PTZ Cameras by Interlogix utilize the latest PTZ technology to provide powerful, cost-effective surveillance for retail, commercial and small business applications. With 1080p resolution and a 30X optical zoom (16X digital) working together, these cameras deliver crisp, clear images, even at a distance.

The HD-TVI Analog PTZ cameras are available in wall/pendant mount (IR or non IR versions) or surface/flush mount (non IR version) to meet various application needs. The surface/flush version includes the flush mount bracket, which can be removed to convert it to a surface mount PTZ. With advanced features, such as True Day/Night surveillance and Digital Wide Dynamic Range (DWDR) imaging, these cameras are able to provide optimal image quality in a variety of indoor or outdoor environments.

These cameras are also fully programmable, with up to 256 presets, 8 preset tours, and shadow tours for end-user customization and flexibility. Motion detection, privacy masking and electronic image stabilization add substantial value and enhanced security to any surveillance system. A 24-zone privacy-mask feature also allows these cameras to block out sensitive areas, such as fitting rooms or restricted areas.

STANDARD FEATURES

Video

- 1080p HD resolution
- 960H BNC output
- HD-TVI technology for transmitting Full HD quality video over existing coax cable

Video Enhancements

- 3DNR and DWDR
- True Day/Night functionality
- Infrared illuminators (on select models)

PTZ

- 30X optical (16X digital)
- 360° endless rotation
- -5° ~ 90° tilt range (non IR models)
- -15° ~ 90° tilt range (IR models)
- Pan preset speed of 240° /s (IR models) and 300° /s (non IR models)
- Tilt preset speed of 200° /s (all models)
- Auto-flip image

Miscellaneous

- TruVision Up-the-Coax data transmission support
- Interlogix RS485, RS422 Digiplex, RS422 ASCII protocols as well as select third-party protocols support
- GEA series mount compatibility
- Flush mount bracket included on surface/flush mount model
- Privacy masking and motion detection

Environmental and Warranty

- IP54 environmental rating on indoor surface/flush mount model
- IP66 environmental rating on outdoor wall/pendant mount and IR model
- IK10 vandal rating (on select models)
- 3-year warranty

	PART NO.	TVP-4401 TVP-2401	TVP-4402 TVP-2402	TVP-4403 TVP-2403
	Description			
Camera	Image Sensor	1/3" CMOS		
	Resolution	1080p on HD-TVI (White) BNC Output / 960H on (Black) BNC Output		
	Effective Pixels	1920(H) x 1080(V)		
	Synchronization	Internal		
	Day/Night	True D/N IR cut filter		
	Wide Dynamic Range	DWDR		
	Digital Noise Reduction	3D-DNR		
	Digital S/N Ratio	52 dB (AGC Off)		
	Electronic Shutter	1-1/10,000s		
	Minimum Illumination	Color: 0.02 lux @ f1.6 (AGC On) B/W: 0.002 lux @ f1.6 (AGC On); 0 lux with IR On		
	IR range	N/A		492 ft. (150m)
	Lens	4.0~120mm @ f1.6~f4.4		
	Zoom Range	30X (Optical), 16X (Digital)		
	Pan Range and Speed	Range: 360° endless Manual speed: 0.1°~250°/sec Preset speed: 300°/sec		Range: 360° endless Manual speed: 0.1°~160°/sec Preset speed: 240°/sec
	Tilt Range and Speed	Range: -5°~90° Manual speed: 0.1°~150°/sec Preset speed: 200°/sec		Range: -15°~90° Manual speed: 0.1°~120°/sec Preset speed: 200°/sec
	Image Flip	Auto flip		
	Video Output	Dual output 960H and HD-TVI		
	Presets	256		
	Patrol	8 - up to 32 presets per patrol		
	Intelligence	Image flip, defog, image freeze		
Alarms and Audio	Audio	N/A		
	I/O	2 input /1 output		N/A
Standards and Integrations	PTZ Protocol	TruVision® Up-the-Coax data transmission support; Interlogix RS485 protocol, Pelco-P, Pelco-D, RS422 Digiplex, RS422 ASCII, BOSCH_CODE, AD_CODE		
Electrical and Mechanical	Voltage Input	24VAC		
	Current	1190 mA		1790 mA
	Power Consumption	20W		30W
	Dimensions (W x H)	8.66 × 12.00 in. (220 × 305 mm)	7.22 × 9.57 in. (183.4 × 243 mm)	8.66 x 13.38 in. (220 x 340mm)
	Weight	(6.61 lbs.) 3 kg		(9.92 lbs.) 4.5 kg
Environmental	Operating Temperature	-22°~149°F (-30°~65°C)	14°~122°F (-10°~50°C)	-22°~149°F (-30°~65°C)
	Environmental Rating	IP66	IP54	IP66
	Vandal Rating	IK10		N/A
Regulatory	Certification	FCC, CE, UL, WEEE, RoHS, REACH		

Dimensional Diagrams

TVP-4401, TVP-2401
Wall/Pendant Mount

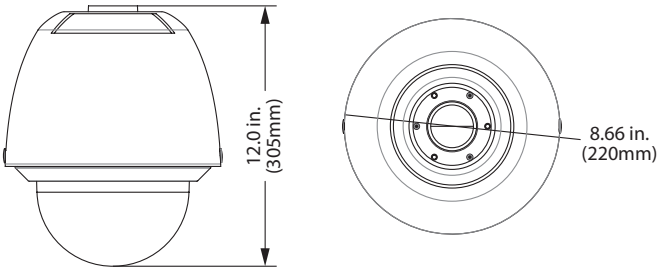

TVP-4402, TVP-2402
Surface/Flush Mount (flush mount bracket included)

Surface Mount

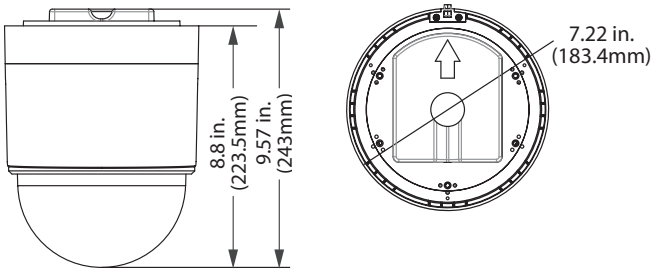

Flush Mount

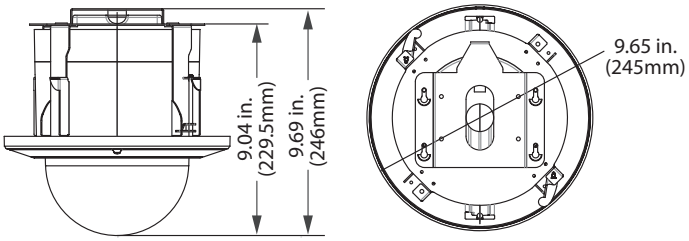

TVP-4403, TVP-2403
IR Wall/Pendant Mount

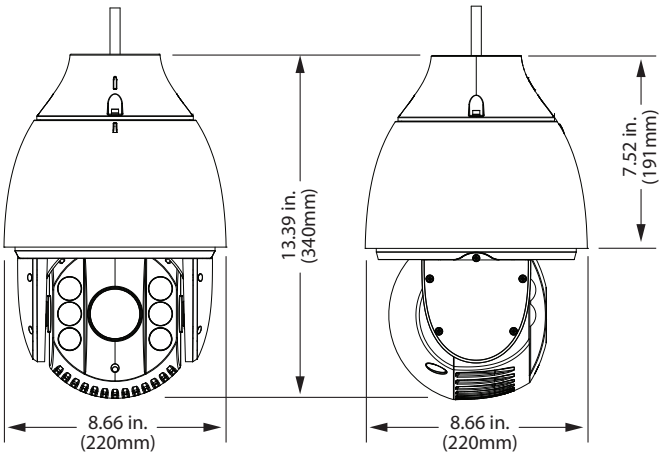

HD-TVI Analog PTZ Cameras

1080p Cameras

Ordering Information

NTSC	
TVP-4401	TruVision® HD-TVI PTZ Dome, 1080p, 30X, DWDR, Wall/Pendant Mount, Monitor & TVI Dual-output, TVI/RS485/RS422 Control, 24VAC, IK10, IP66, NTSC
TVP-4402	TruVision HD-TVI PTZ Dome, 1080P, 30X, DWDR, Surface/Flush Mount, Monitor & TVI Dual-output, TVI/RS485/RS422 Control, 24VAC, IK10, IP54, NTSC
TVP-4403	TruVision HD-TVI IR PTZ Dome, 1080P, 30X, DWDR, 150m IR, Wall/Pendant Mount, Dual Output 960H Monitor & TVI, TVI/RS485/RS422 Control, 24VAC, IP66, NTSC
PAL	
TVP-2401	TruVision® HD-TVI PTZ Dome, 1080p, 30X, DWDR, Wall/Pendant Mount, Monitor & TVI Dual-output, TVI/RS485/RS422 Control, 24VAC, IK10, IP66, PAL
TVP-2402	TruVision HD-TVI PTZ Dome, 1080P, 30X, DWDR, Surface/Flush Mount, Monitor & TVI Dual-output, TVI/RS485/RS422 Control, 24VAC, IK10, IP54, PAL
TVP-2403	TruVision HD-TVI IR PTZ Dome, 1080P, 30X, DWDR, 150m IR, Wall/Pendant Mount, Dual Output 960H Monitor & TVI, TVI/RS485/RS422 Control, 24VAC, IP66, PAL

Accessories

1060050A	Pendant Adapter for PTZ, 1-1/4 NPT, Rubber Boot, UTC Gray (Used with Outdoor Pendant)
GEA-102	Wall Mount, Cast Aluminum
GEA-104	Parapet Swing-Arm Mount
GEA-105	Corner-Mount Adapter
GEA-106	Pole-Mount Adapter
GEA-107	Roof-Mount Adapter

interlogix
United Technologies

interlogix.com

Specifications subject to change without notice.

© 2017 United Technologies Corporation.
All rights reserved.
Interlogix is part of UTC Climate, Controls & Security,
a unit of United Technologies Corporation.

2017/03 (GSP-2334)