1.3MPx and 3MPx Intelligent IP Dome Cameras

IP Open Standards

PROGRESSIVE SCAN | H.264 COMPRESSION | 30/25 FPS | WDR | IP66 | PoE | TRUE DAY/NIGHT | PRIVACY MASK | SD Card | IK10

OVERVIEW

TruVision IP Open Standards dome cameras bring state-of-the-art, high-definition pictures to the mass video surveillance market. With camera resolutions of 1.3 or 3 megapixel, these IP cameras represent a flexible video surveillance device to meet any need. Equipped with advanced technology and signal processing capability, they effectively capture video under challenging conditions.

TruVision cameras utilize H.264 compression technology with triple-streaming capability, making it easy to manage the camera's bandwidth usage. These cameras adhere to PSIA and ONVIF Profile S open communication standards, and also support a CGI command set for simple integration into any IP system. Video streams can be set for high or low bandwidth, and images can be streamed for live viewing or sent to a designated recording location.

These cameras go above and beyond standard motion detection with enhanced alarm capabilities, including cross lines, intrusion, de-focus and face detection features. Each is user-configurable to best suit the installation environment. A Region of Interest function ensures specific portions of an image are given priority during instances of high network traffic or network degradation.

Location-specific functions include a Hallway View Mode to provide a portrait view of a hallway or corridor, a De-Fog Mode to help resolve images though fog or rain and Electronic Image Stabilization for installations subject to physical vibration or shaking.

STANDARD FEATURES

Video

- 1.3MPx and 3MPx imagers
- H.264 compression technology with triple-streaming capability accommodates multiple settings
- Select models feature real-time video streaming up to 1080p resolution to capture every detail
- Designed to PSIA and ONVIF Profile S open standards

Video Enhancement

- True Day/Night functionality and infrared illuminators to capture images in various lighting scenarios
- Up to 120dB of Wide Dynamic Range (WDR) performance for contrasting lighting environments
- ROI (Region of Interest), hallway view, mirror, de-fog, electronic image stabilization

Advanced Alarm Intelligence

- Integrated motion detection and privacy masking
- Face detection, cross line, intrusion detection, de-focus detection, scene change detection
- Alarm inputs and outputs provide easy notification and control of events

Edge Recording

- Edge recording supports up to 64GB micro SD/SDXC card for video playback

Standard Features

Environment and Installation

- Vandal-resistant housings and polycarbonate bubbles provide an extra level of protection
- Domes feature external analog BNC video out connection for easier installation and setup
- Included TruVision Device Manager program provides fast and easy access to newly added system devices
- UL approved

Warranty

- 3-Year warranty

Application

Delivering detailed images in a variety of environments that need it most, TruVision® IP cameras are specifically designed for applications that require high-quality IP images. These cameras provide ideal surveillance for environments such as retail, banking, airports or gaming where detailed image capture is critical for effectively monitoring people and transactions.

Accessories – General Bracket

TVD-SNB
Swan Neck Bracket

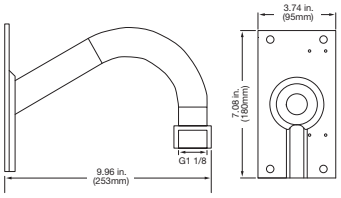

TVD-SNB-BB
Back Box

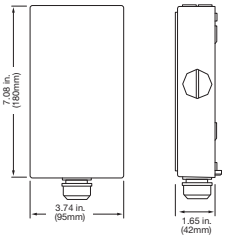

TVD-PPB
Pendant Ceiling Bracket

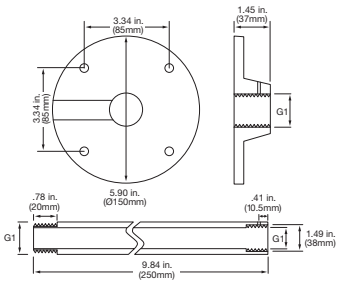

TVD-M-PMA
Pole Mount Adaptor

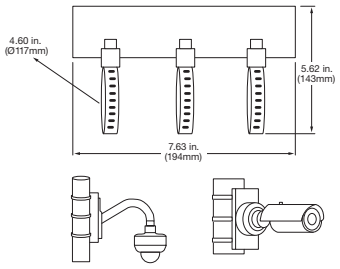

TVD-M-CMA
Corner Mount Adaptor

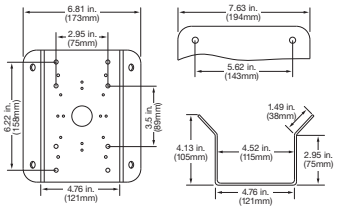

Accessories – VF Mini Dome

TVD-M2-WM
Indoor Dome Wall Mount

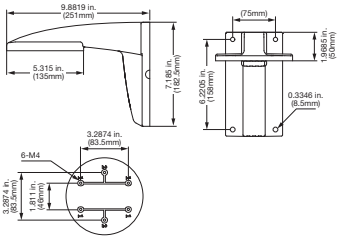

TVD-M2-FM
Indoor Dome Flush Mount

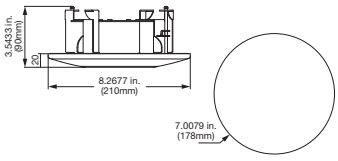

TVD-CB3
3" Cup Base

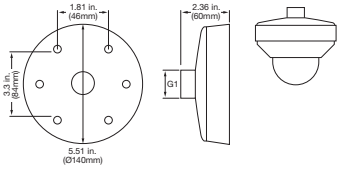

Accessories – Motorized Lens Dome

TVD-CB5A
Integrated 5" Cup Base

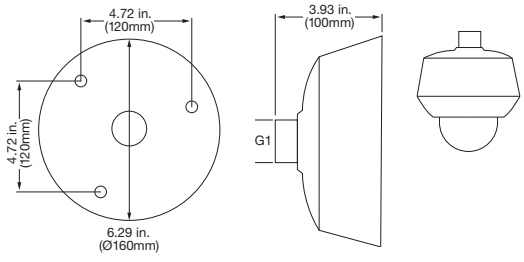

Specifications

	PART NO.	TVD-3201 TVD-1201	TVD-3202 TVD-1202	TVD-3203 TVD-1203	TVD-3204 TVD-1204	TVD-3205 TVD-1205
	Description					
Camera	Sensor	1/3" Progressive Scan CMOS				
	Day/Night	IR Cut Filter				
	IP Compression	H.264 (Baseline profile / Main profile / High profile) / MPEG4 / MJPEG				
	Maximum Resolution (@ fps)	1280 x 960 @ 25fps (50Hz) 1280 x 960 @ 30fps (60Hz)	2048 ×1536 @ 20fps (50Hz) 2048 ×1536 @ 20fps (60Hz)	1280 x 960 @ 25fps (50Hz) 1280 x 960 @ 30fps (60Hz)	2048 ×1536 @ 20fps (50Hz) 2048 ×1536 @ 20fps (60Hz)	
	Maximum Real-Time Resolution (@ fps)	1280 x 960 @ 25fps (50Hz) 1280 x 960 @ 30fps (60Hz) 1280 x 720 @ 50fps (50Hz, WDR off) 1280 x 720 @ 60fps (60Hz, WDR off)	1920 x 1080 @ 25fps (50Hz) 1920 x 1080 @ 30fps (60Hz)	1280 x 960 @ 25fps (50Hz) 1280 x 960 @ 30fps (60Hz) 1280 x 720 @ 50fps (50Hz, WDR off) 1280 x 720 @ 60fps (60Hz, WDR off)	1920 x 1080 @ 25fps (50Hz) 1920 x 1080 @ 30fps (60Hz)	
	Multiple Streaming	Triple streams				
	Video Bit Rate	128 kbps to 16 Mbps, or user-defined				
	WDR	120dB				
	Sensitivity	Color 0.01 lux @ f1.2, AGC ON 0 lux IR ON	Color 0.1 lux @ f1.2, AGC ON 0 lux IR ON	Color 0.01 lux @ f1.2, AGC ON 0 lux IR ON	Color 0.1 lux @ f1.2, AGC ON 0 lux IR ON	
	S/N Ratio	50 dB (AGC OFF)				
	Auto Exposure (shutter)	50 Hz: 1/25s ~1/100,000s 60 Hz: 1/30s ~1/100,000s				
	Composite Output (BNC)	1Vp-p composite output (75 Ω/BNC)		Internal BNC port for installation only		
	Lens	2.8 ~12mm VF lens		2.8 ~12mm motorized lens		8 ~ 32mm motorized lens
	Focus	Manual		one touch Remote Auto Focus		
	IR Distance	98 ft. (30m)				164 ft. (50m)
Electrical	Voltage Input	12VDC PoE (IEEE 802.3-af)		24VAC, PoE (IEEE 802.3-af)		
	Current	0.67A		0.71A		
	Power Consumption	Max. 8W	Max. 8.5W	Max. 12.5W (heater on)		
	I/O Connection	1/1		2/2		
	Others	RS-485				
Network	Network Protocols	TCP/IP, UDP, HTTP, DHCP, DNS, DDNS, ezDDNS, DynDNS, RTP, RTSP, PPPoE, SMTP, NTP, SNMP, HTTPS, FTP, UPnP, NAT, MULTICAST, 802.1x, Qos, IPv4, IPv6				
	PoE	IEEE 802.3-af				
	Port	10/100Mbps, auto-negotiate, Ethernet port (RJ45)				
Local Storage	Media	Micro SD/SDXC				
	Capacity	Up to 64GB				
Camera Alarms	Basic	Motion Detection, Tamper Proof, Privacy Mask				
	Advanced	Face Detection, Cross Line, Intrusion Detection, De-focus Detection, Scene Change Detection				
Standard & Integration		ONVIF Profile S, PSIA, CGI				
Display	Display mode	ROI (Region of Interest), Hallway View, Mirror, De-fog, Electronic Image Stabilization				
	OSD	Text overlay and picture overlay				
Mechanical/ Environment	Dimensions	5.51 × 3.94 in. (140 × 100 mm)		6.29 × 5.75 in. (159.8 × 146 mm)		
	Weight	1.76 lbs. (800g)		4.63 lbs. (2100g)		
	Storage Temperature	-4°F~158°F (-20°C~70°C)		-4°F~158°F (-20°C~70°C)		
	Operating Temperature (cold start)	-22°F~140°F (-30°C~60°C)		-40°F~140°F (-40°C~60°C), with heater on		
	Operating Temperature	-22°F~140°F (-30°C~60°C)		-58°F~140°F (-50°C~60°C), with heater on		
	Environmental Rating	IP66				
	Vandal Rating	IK10				
Regulation	Compliance	FCC, CE, UL, C-Tick, REACH, RoHS, WEEE				

1.3MPx and 3MPx Intelligent IP Dome Cameras

IP Open Standards

North America
T 855-286-8889

Latin America
T 561-998-6114

Dimensional Diagrams

Vandal Dome

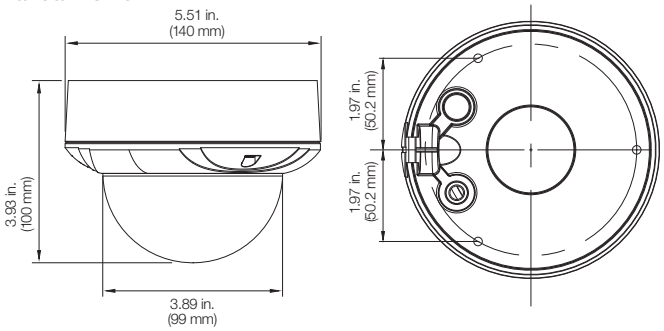

Motorized Vandal Dome

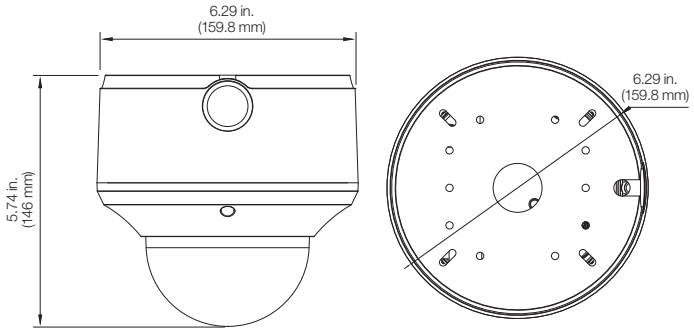

Ordering Information

NTSC	
TVD-3201	TruVision® IP Vandal Dome Camera, 1.3MPx, 2.8~12mm VF Lens, WDR, True D/N, 30m IR, Alarm, SD/SHDC Slot, Intelligence, PoE (802.3-af) / 12VDC, IP66, IK10, NTSC
TVD-3202	TruVision IP Vandal Dome Camera, 3MPx, 2.8~12mm VF Lens, WDR, True D/N, 30m IR, Alarm, SD/SHDC Slot, Intelligence, PoE (802.3-af) / 12VDC, IP66, IK10, NTSC
TVD-3203	TruVision IP Motorized Lens Dome Camera, 1.3MPx, 2.8~12mm Motorized Lens, WDR, True D/N, 30m IR, Alarm, SD/SHDC Slot, Intelligence, PoE (802.3-af) / 24VAC, Heater, IP66, IK10, NTSC
TVD-3204	TruVision IP Motorized Lens Dome Camera, 3MPx, 2.8~12mm Motorized Lens, WDR, True D/N, 30m IR, Alarm, SD/SHDC Slot, Intelligence, PoE (802.3-af) / 24VAC, Heater, IP66, IK10, NTSC
TVD-3205	TruVision IP Motorized Lens Dome Camera, 3MPx, 8~32mm Motorized Lens, WDR, True D/N, 50m IR, Alarm, SD/SHDC Slot, Intelligence, PoE (802.3-af) / 24VAC, Heater, IP66, IK10, NTSC
PAL	
TVD-1201	TruVision IP Vandal Dome Camera, 1.3MPx, 2.8~12mm VF Lens, WDR, True D/N, 30m IR, Alarm, SD/SHDC Slot, Intelligence, PoE (802.3-af) / 12VDC, IP66, IK10, PAL
TVD-1202	TruVision IP Vandal Dome Camera, 3MPx, 2.8~12mm VF Lens, WDR, True D/N, 30m IR, Alarm, SD/SHDC Slot, Intelligence, PoE (802.3-af) / 12VDC, IP66, IK10, PAL
TVD-1203	TruVision IP Motorized Lens Dome Camera, 1.3MPx, 2.8~12mm Motorized Lens, WDR, True D/N, 30m IR, Alarm, SD/SHDC Slot, Intelligence, PoE (802.3-af) / 24VAC, Heater, IP66, IK10, PAL
TVD-1204	TruVision IP Motorized Lens Dome Camera, 3MPx, 2.8~12mm Motorized Lens, WDR, True D/N, 30m IR, Alarm, SD/SHDC Slot, Intelligence, PoE (802.3-af) / 24VAC, Heater, IP66, IK10, PAL
TVD-1205	TruVision IP Motorized Lens Dome Camera, 3MPx, 8~32mm Motorized Lens, WDR, True D/N, 50m IR, Alarm, SD/SHDC Slot, Intelligence, PoE (802.3-af) / 24VAC, Heater, IP66, IK10, PAL

Part Number Schema

TV	D	-	3	2	0	1
	IP Type D=Dome		**Format** 1=IP PAL 3=IP NTSC	**Series** 1=1st 2=2nd	**Camera Specifics**	

interlogix
United Technologies

interlogix.com

Specifications subject to change without notice.

© 2015 United Technologies Corporation.
All rights reserved.
Interlogix is part of UTC Building & Industrial Systems,
a unit of United Technologies Corporation.

412-3881 2015/01 (80110)