MPK Master Pin Kit (Continued)

Item Number	Description	Quantity
809330	Top Pin 4, IC Core Cylinders	100
809331	Top Pin 5, IC Core Cylinders	
809332	Top Pin 6, IC Core Cylinders	
809333	Top Pin 7, IC Core Cylinders	
809334	Top Pin 8, IC Core Cylinders	
809335	Top Pin 9, IC Core Cylinders	
809336	Top Pin 10, IC Core Cylinders	
809340	IC Core Chamber Springs (1-4)	
816080	Twin-Pro Sidepin	50
867015	Side Pin, ASSA Twin	
867065	600/Twin Pin Chamber Springs	100
807261	Top Pin A, Twin & 600	
807262	Top Pin B, Twin & 600	
807263	Top Pin C, Twin & 600	
807264	Top Pin D, Twin & 600	
867070	Master Pin 1, Twin & 600	
867071	Master Pin 2, Twin & 600	
867072	Master Pin 3, Twin & 600	
867073	Master Pin 4, Twin & 600	
867074	Master Pin 5, Twin & 600	
867075	Master Pin 6, Twin & 600	
867076	Master Pin 7, Twin & 600	
867077	Master Pin 8, Twin & 600	
867078	Bottom Pin 1, Twin & 600	
867079	Bottom Pin 2, Twin & 600	
867080	Bottom Pin 3, Twin & 600	
867081	Bottom Pin 4, Twin & 600	
867082	Bottom Pin 5, Twin & 600	
867083	Bottom Pin 6, Twin & 600	
867084	Bottom Pin 7, Twin & 600	
867085	Bottom Pin 8, Twin & 600	
867086	Bottom Pin 9, Twin & 600	
867087	Twin Spring For Side Pin	
867088	Twin Spring For Side Bar	
867090	Std Tail Piece Screw Twin/600	25
867445	Cam, Adams Rite 600/Twin	2
867446	Cam, Clover Leaf 600/Twin	
867447	Cam, Beaver Tail 600/Twin	
867452	Cam, Sargent 600/Twin	
867453	Cam, Schlage	
868141	M/R Cover Strip 600/Twin	50
868624	Rollpin Corbin/4—Sargent/2	10
868958	Schlage Plug Cap	4
868959	Schl KIK Plug Cap Sprg-Deleted	
868960	Schlage KIK Plug Cap Pin	
872610	Cam, Standard 600/Twin	2
900257	Yale Tailpiece Roll Pin	10

PK-1 Pin Kit

Item Number	Description	Quantity
353838	Left Side Pin V-10	50
359654	Twin-Max Sidepin Left	
807164	V-10/T Pro Spring For Side Bar	100
807165	V-10/T Pro Sidepin Springs	
816080	Twin-Pro Sidepin	50
867015	Side Pin, ASSA Twin	
867065	600/Twin Pin Chamber Springs	500
807261	Top Pin A, Twin & 600	100
807262	Top Pin B, Twin & 600	
807263	Top Pin C, Twin & 600	
807264	Top Pin D, Twin & 600	
867070	Master Pin 1, Twin & 600	
867071	Master Pin 2, Twin & 600	
867072	Master Pin 3, Twin & 600	
867073	Master Pin 4, Twin & 600	
867074	Master Pin 5, Twin & 600	
867075	Master Pin 6, Twin & 600	
867076	Master Pin 7, Twin & 600	
867077	Master Pin 8, Twin & 600	
867078	Bottom Pin 1, Twin & 600	
867079	Bottom Pin 2, Twin & 600	
867080	Bottom Pin 3, Twin & 600	
867081	Bottom Pin 4, Twin & 600	
867082	Bottom Pin 5, Twin & 600	
867083	Bottom Pin 6, Twin & 600	
867084	Bottom Pin 7, Twin & 600	
867085	Bottom Pin 8, Twin & 600	
867086	Bottom Pin 9, Twin & 600	
867087	Twin Spring For Side Pin	
867088	Twin Spring For Side Bar	
867090	Standard Tail Piece Screw Twin/600	
868141	M/R Cover Strip 600/Twin	

PKMM Pin Kit

Item Number	Description	Quantity
807164	V-10/T Pro Spring For Side Bar	25
867065	600/Twin Pin Chamber Springs	
807261	Top Pin A, Twin & 600	
807262	Top Pin B, Twin & 600	
807263	Top Pin C, Twin & 600	
807264	Top Pin D, Twin & 600	
867070	Master Pin 1, Twin & 600	
867071	Master Pin 2, Twin & 600	
867072	Master Pin 3, Twin & 600	
867073	Master Pin 4, Twin & 600	
867074	Master Pin 5, Twin & 600	
867075	Master Pin 6, Twin & 600	
867076	Master Pin 7, Twin & 600	
867077	Master Pin 8, Twin & 600	
867078	Bottom Pin 1, Twin & 600	
867079	Bottom Pin 2, Twin & 600	
867080	Bottom Pin 3, Twin & 600	
867081	Bottom Pin 4, Twin & 600	
867082	Bottom Pin 5, Twin & 600	
867083	Bottom Pin 6, Twin & 600	
867084	Bottom Pin 7, Twin & 600	
867085	Bottom Pin 8, Twin & 600	
867086	Bottom Pin 9, Twin & 600	
867088	Twin Spring For Side Bar	
867090	Std Tail Piece Screw Twin/600	

General Info.
Electronic Access Control
Keys & Keying
Mortise Cyls.
Rim Cyls.
Mogul Cyls.
IC Core Cyls.
KIK/KIL Cyls.
Deadbolts
Auxiliary Locks
Padlocks
Profile Cyls.
Pin Kits Tools & Accessories
Care & Maint.
Technical Specs.

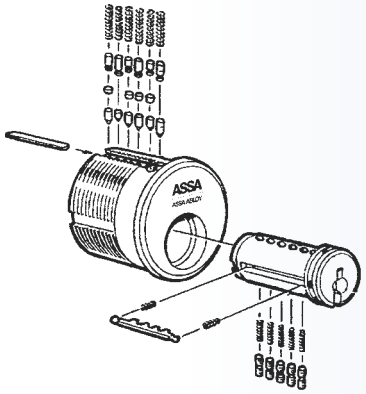

Pins, Spring & Closers

Model#	Notes	Description	Pkg. Qty.
807261		Driver Pin 1-2 (A)	100
807262		Driver Pin 3-4 (B)	
807263		Driver Pin 5-6 (C)	
807264		Driver Pin 7-8-9 (D)	
867070		Master Pin 1	
867071		Master Pin 2	
867072		Master Pin 3	
867073		Master Pin 4	
867074		Master Pin 5	
867075		Master Pin 6	
867076		Master Pin 7	
867077		Master Pin 8	
867078		Bottom Pin 1	
867079		Bottom Pin 2	
867080		Bottom Pin 3	
867081		Bottom Pin 4	
867082		Bottom Pin 5	
867083		Bottom Pin 6	
867084		Bottom Pin 7	
867085		Bottom Pin 8	
867086		Bottom Pin 9	
867065		Cylinder Springs	
267008	*	Sidebar	25
867015		Twin Side Pins	50
353838		V-10 Left Hand Side Pins	
359654		Maximum+ / Twin Maximum Left Hand Side Pins	
807164		Maximum+ / Twin Maximum / V-10 Sidebar Springs	100
807165		Maximum+ / Twin Maximum / V-10 Sidepin Springs	
867087		Twin Sidepin Springs	
867088		Twin Sidebar Springs	
868141		Pin Chamber Closing Strips, Mort, Rim, KIK	
867093		Closing Plugs, Oval Cylinders	
806346		Pin Chamber Closing Screws - Jumbo, Mogul, Dbolt	

*Specify Side Code

ASSA Twin Series Pinning

The same bottom and master pins used in all ASSA Twin Series, Maximum+, and 600 Series product are made of high-quality nickel silver. The deepest cut on a Twin Series and Maximum+ key is the #1 length and the shallowest is the #9 length. This makes the #1 pin the longest and the #9 pin the shortest. All pins are 0.114" in diameter.

Bottom Pin Part Numbers & Lengths		
Pin Size	Part Number	Length
#1	867078	0.3503"
#2	867079	0.3267"
#3	867080	0.3031"
#4	867081	0.2795"
#5	867082	0.2559"
#6	867083	0.2322"
#7	867084	0.2086"
#8	867085	0.1850"
#9	867086	0.1614"

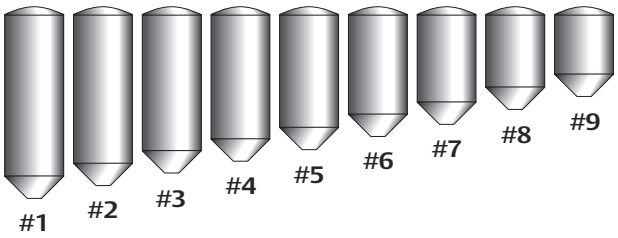

Pins for ASSA cylinders do not taper to a ball nose radius like most pin tumbler pins, but have a flat tip that is 0.020" in diameter. This provides more reliable contact between tumbler and key

Master Pin Part Numbers & Lengths		
Pin Size	Part Number	Length
#1	867070	0.0236"
#2	867071	0.0472"
#3	867072	0.0708"
#4	867073	0.0944"
#5	867074	0.1181"
#6	867075	0.1417"
#7	867076	0.1652"
#8	867077	0.1889"

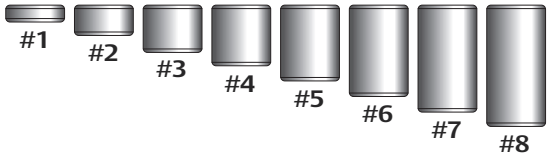

ASSA Twin master pins are engineered for single step \masterkeying, creating the largest master key capabilities of any pin tumbler lock in production.

By numbering from the smallest to the largest, pinning may easily be calculated by subtracting the master pin number from the bottom pin number. (i.e. 7 - 3 = 4. A #3 master pin with a #7 bottom pin is the same physical length as a #4 bottom pin alone.) If the master pin (or pins) leave a remainder of less than one when subtracted from the bottom pin, the overall stack height of the chamber is wrong.