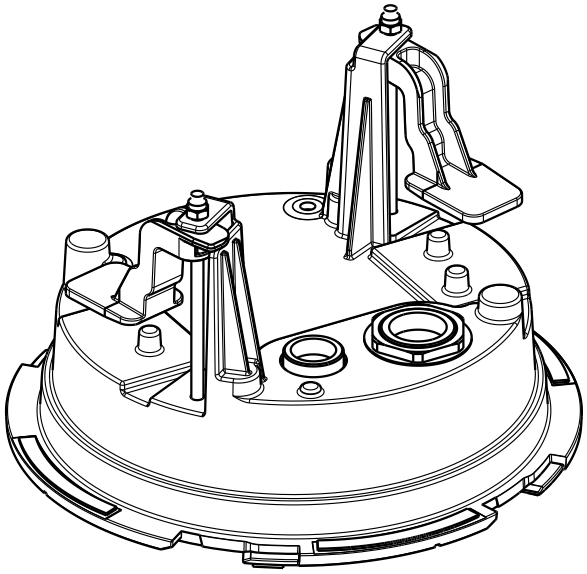

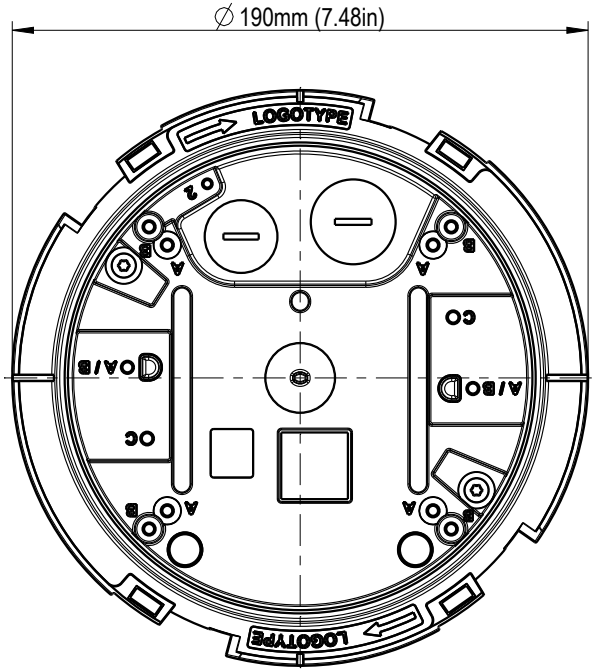

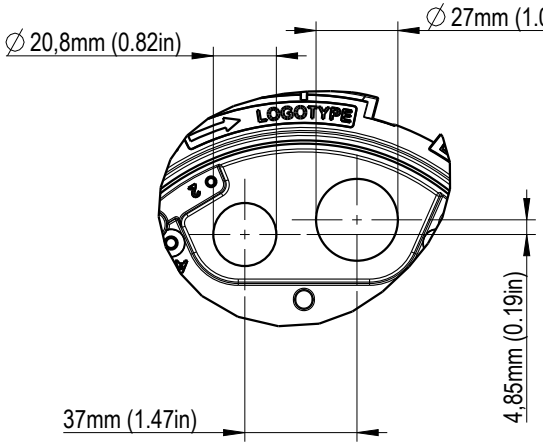

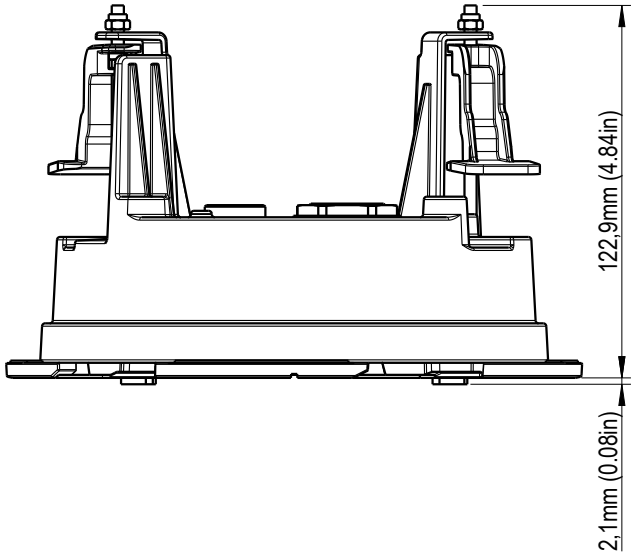

AXIS T94K01L Recessed Mount Accessory

21 OCTOBER, 2014