DC500 Series Door Closers

Classic Product

The Arrow DC500 Series Heavy Duty Surface Applied Door Closers are ideal for Institutions or other high traffic applications. The DC500 is designed for end users looking for value and versatility in a rugged design making this series suitable for a wide variety of applications.

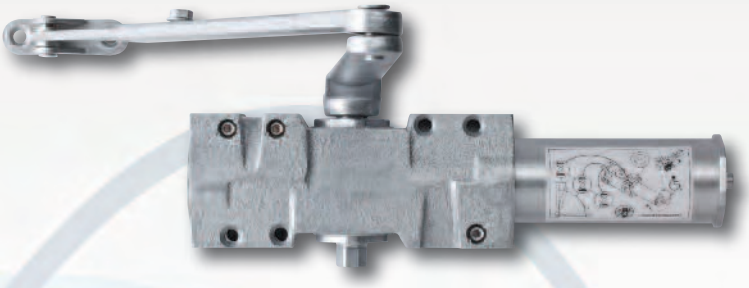

Compliance:

- UL/cUL listed.
- UL10C listed for positive pressure to comply with UBC-72 (1997).
- Meets the requirements of ANSI A156.4 and ANSI ICC A117.1. Grade 1
- Meets ADA requirements (Americans with Disabilities Act).

BHMA CERTIFIED
Be Safe. Be Secure. Be Certified.

Look for the universal symbol next to Arrow products that comply with ADA accessibility requirements.

Sizes (Adjustable):

- DC516 closers are adjustable for spring sizes 1 through 6 .

Interior Door Width	24" (610mm)	30" (762mm)	34" (865mm)	38" (965mm)	48" (1219mm)	54" (1372mm)	60" (1524mm)
Regular Arm & Top Jamb	Size 1	Size 2	Size 3	Size 4	Size 5	Size 6	
Parallel Arm	Size 2	Size 3	Size 4	Size 5	Size 6		

Exterior (& Vestibule) Door Width	24" (610mm)	30" (762mm)	36" (914mm)	42" (1067mm)	48" (1219mm)
Regular Arm & Top Jamb	Size 3	Size 4	Size 5	Size 6	
Parallel Arm	Size 4	Size 5	Size 6		

Features:

- Heavy duty cast iron body.
- Hardened steel rack and pinion.
- High tensile steel springs.
- Staked valves
- Two non-critical adjusting valves (sweep and latch) control closing speed.
- Backcheck intensity valve.
- All temperature fluid.
- Full plastic cover standard.
- Non-handed for regular, top jamb and parallel arm mount applications.
- Supplied with fully threaded self-reaming/tapping screws, sleeve nuts and thru-bolts for 1-3/4" thick doors.
- DC516-1 Series door closers are supplied with a hold open arm.
- DC516-2 has a heavy duty parallel arm with a stop feature for door openings between 90° and 110°.
- DC516-3 has a heavy duty parallel arm with a stop and thumb turn hold open feature for door openings between 90° and 110°.
- Packaging: one per box and four boxes per carton.
- 10 year limited warranty.

Finishes:

- Aluminum (689), Specify **AL**
- Dark Bronze (690), Specify **DBZ**

Regular Arm Installation

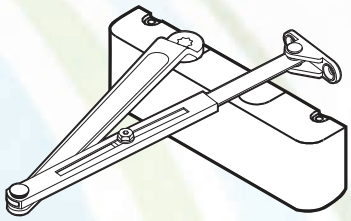

Top Jamb Installation

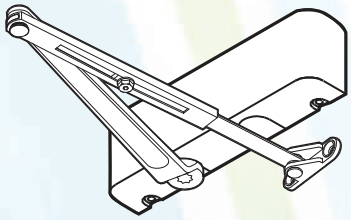

Parallel Arm Installation

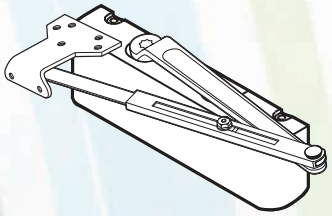

Heavy Duty Parallel Arm Installation

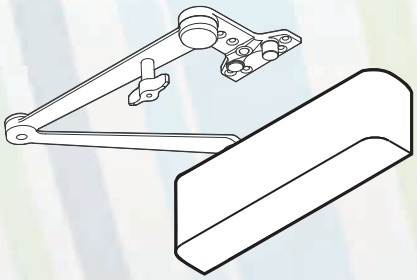

ARROW LOCK & DOOR HARDWARE
ASSA ABLOY

ASSA ABLOY, the global leader in door opening solutions

DC500 Series Door Closers

Classic Product

Regular Arm Installation

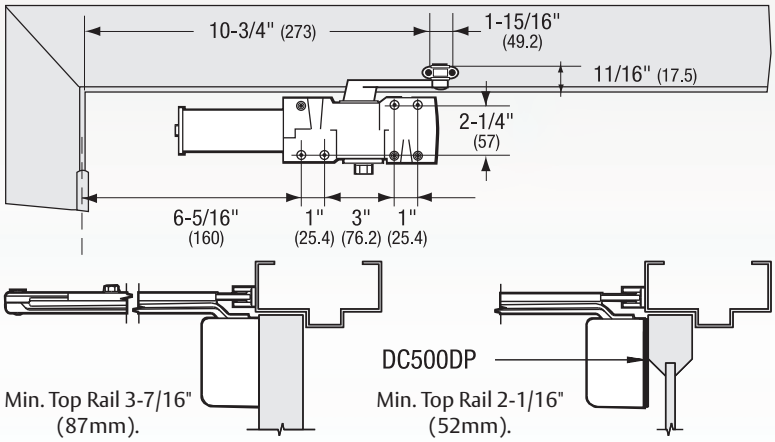

Parallel Arm Installation (180° maximum door swing template illustrated).

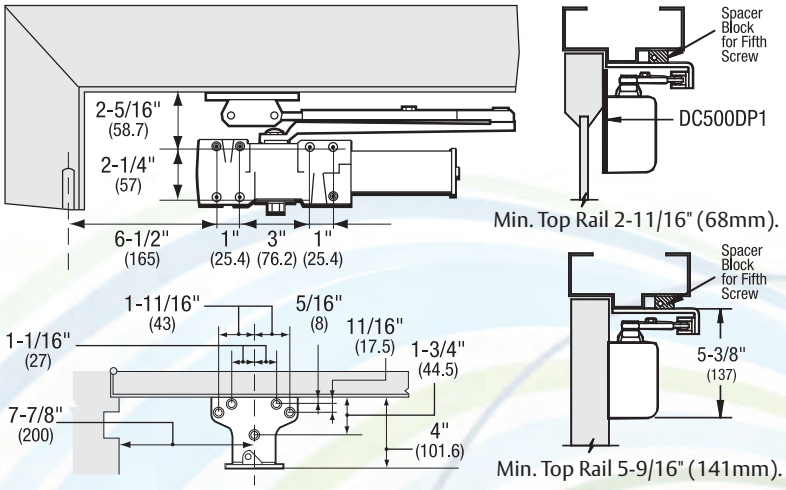

Top Jamb Installation

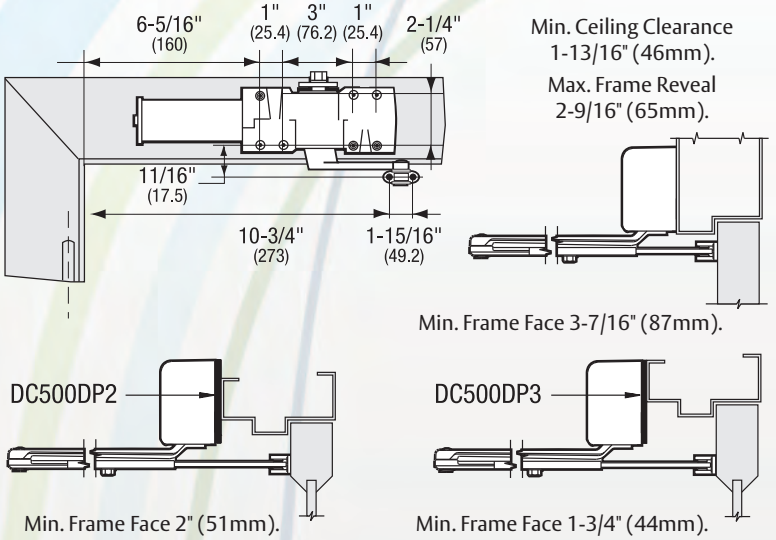

Parts:

Cover with Screw Pack
- **DC500COV**

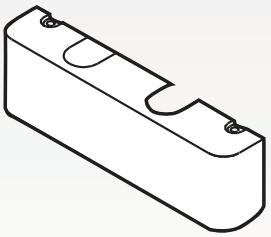

Non-Hold Open Arm (Standard with)
- **DC516**

(To order separately)
- **DC500A**

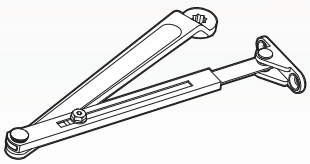

Hold Open Arm (Standard with)
- **DC516-1**

(To order separately)
- **DC500A1**

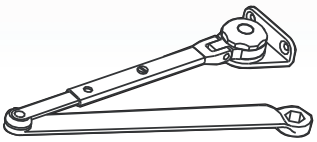

Drop Plates

Regular Arm Application
- **DC500DP**

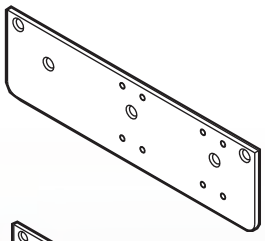

Parallel Arm Application
- **DC500DP1**

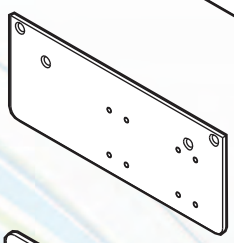

Top Jamb Application
- **DC500DP2**

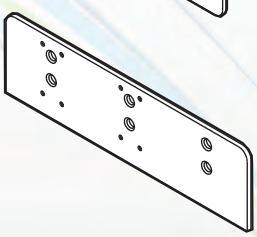

Top Jamb Low Ceiling Application
- **DC500DP3**

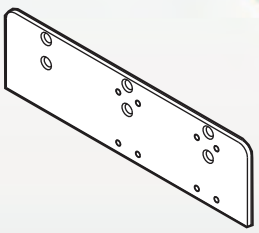

ASSA ABLOY, the global leader in door opening solutions

ARROW LOCK & DOOR HARDWARE

ASSA ABLOY

DC500 Series Door Closers

Classic Product

How to order the DC500 Series

Ordering Example:

Quantity	Part Number		Finish
20	DC516-3	•	AL

Complete Units:

	Part No.
Size 1-6, Non-Hold Open Arm with PA Bracket, Full Plastic Cover, Screw Pack, 1-3/4" Thru-bolts	DC516
Size 1-6, Hold Open Arm with PA Bracket, Full Plastic Cover, Screw Pack, 1-3/4" Thru-bolts	DC516-1
Size 1-6, Heavy-Duty Dead Stop NHO, Full Plastic Cover, Screw Pack, 1-3/4" Thru-bolts	DC516-2
Size 1-6, Heavy-Duty Dead Stop HO, Full Plastic Cover, Screw Pack, 1-3/4" Thru-bolts	DC516-3

Parts & Accessories:

	Part No.
Full Plastic Cover	DC500CV
Drop Plate - Regular	DC500DP
Drop Plate - Parallel Arm	DC500DP1
Drop Plate - Top Jamb	DC500DP2
Drop Plate - Top Jamb, Flush Ceiling	DC500DP3
Thru-bolts 1-3/4"	DC500TB1
Thru-bolts 1-3/8"	DC500TB3
Thru-bolts 2-1/4"	DC500TB2
Supplemental Reaming/Tapping Screw Pack	DC500SP1
Standard Screw Pack	DC500SP2
Standard Non-Hold Open Arm	DC500A
Standard Hold Open Arm	DC500A1
Heavy-Duty Dead Stop Arm Non-Hold Open	DC500A2
Heavy-Duty Dead Stop Arm Hold Open	DC500A3
Heavy-Duty Cushion Arm Kit	DC500A4
Heavy-Duty Hold Open Cushion Arm KIt	DC500A5

Specify Finish **AL** or **DBZ.**