EA224WMi Outline

Cabinet Color
- White Model
  - Front Bezel : Whitish Gray
  - Rear Cover : Whitish Gray
  - Stand : Whitish Gray
- Black Model
  - Front Bezel : Pure Black
  - Rear Cover : Pure Black
  - Stand : Pure Black

Stand Function
- Tilt Angle : Up 30 degree / Down -5 degree
- Swivel Angle : Left 170 degree / Right 170 degree
- Pivot Angle : Clockwise 90 degree
- Height Adjust : 130 mm
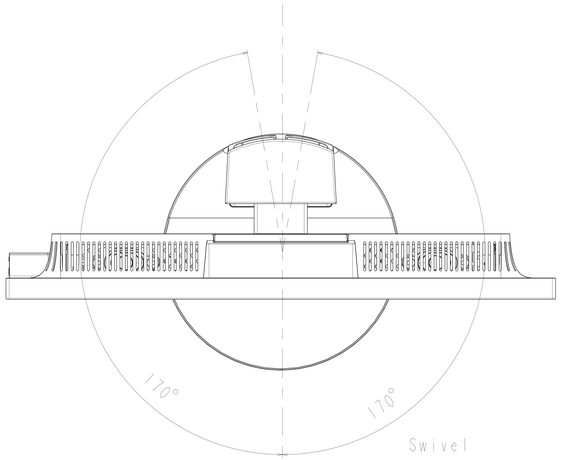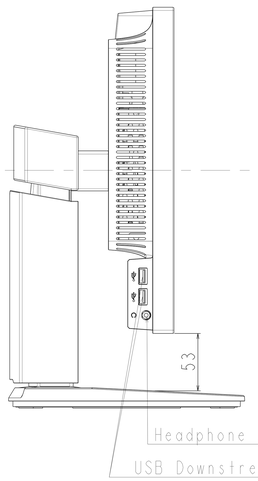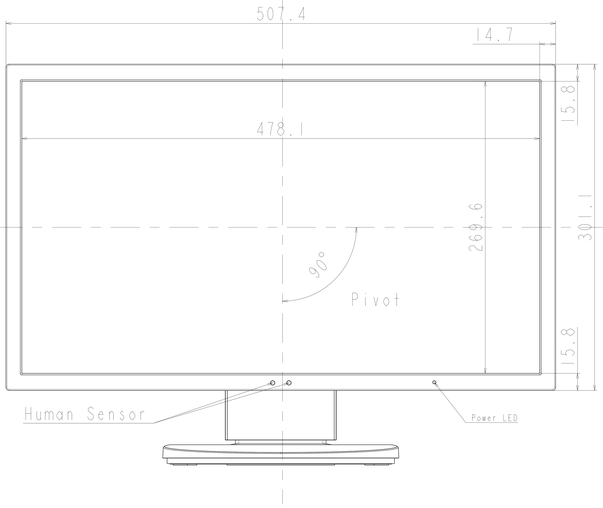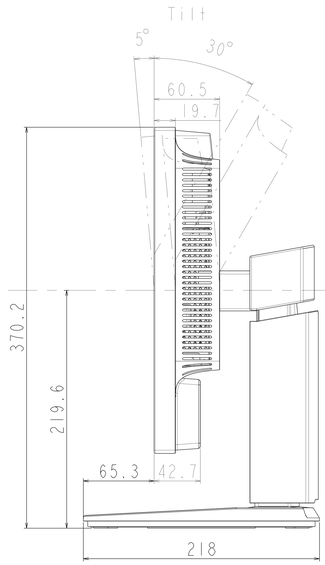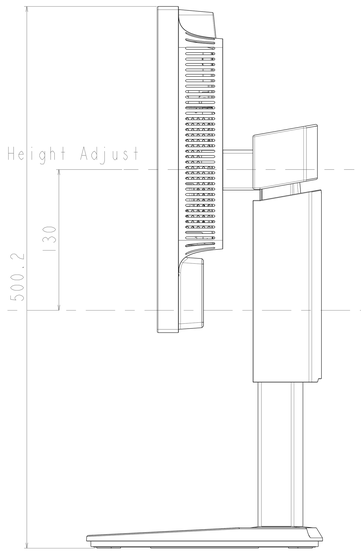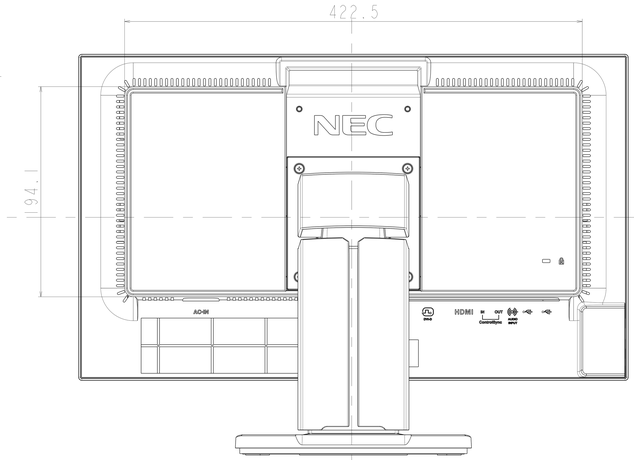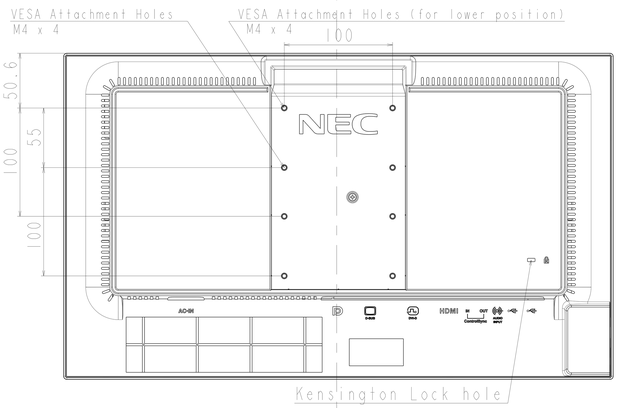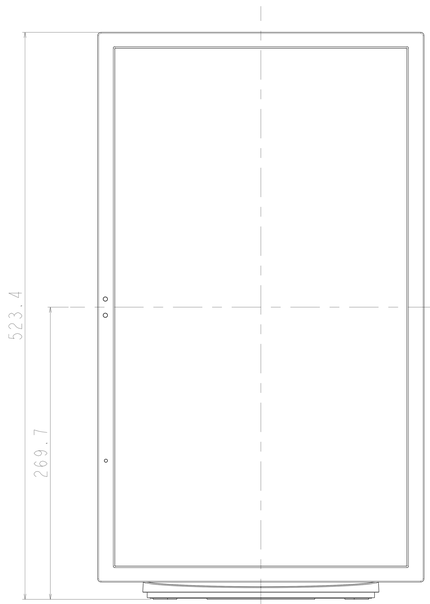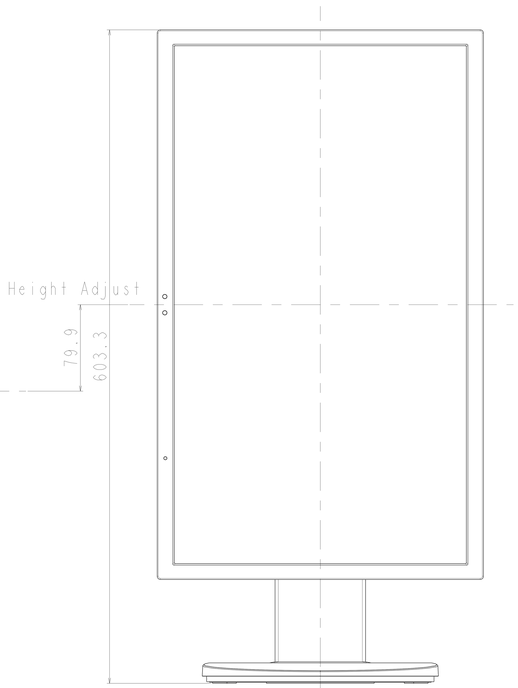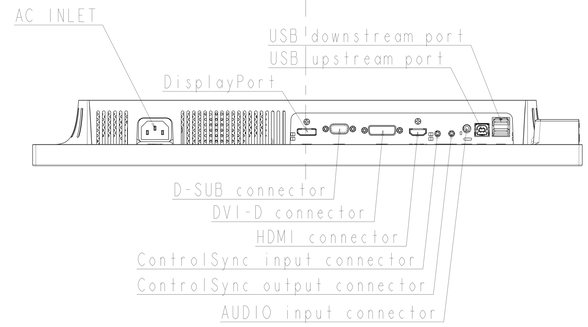
Weight
- With Stand : 6.0 kg
- Without Stand : 3.7 kg