MODEL 1020-RAB-PMK

Installation Instructions

**** WARNING ****

Please thoroughly read the product warning below before installation to provide for a safe work environment.

1. Always consider the hazard to other people:

    a. During installation, use warning signs, etc.
    b. Don’t work with people directly below the work area as equipment could fall and cause an injury

2. Be sure to securely fasten the enclosure to the wall or ceiling to prevent the enclosure from becoming dislodged.

Installation Instructions

Model 1020-RAB-PMK

Assembly Components:

- *Polycarbonate Enclosure – 1 each*
- *Right Angle Bracket – 1 each*
- *T-Bar Bracket – 1 each*
- *Pole Mount Bracket – 1 each*
- *M4x0.7 x 10 screw – 4 each*
- *M4x0.7 x 20 screw – 4 each*
- *#6 - 32 x 1/4" screw – 4 each*
- *#6 - 32 x 7/8" screw – 2 each*
- *Nylon Spacer – 2 each*
- *Worm Gear Clamp – 2 each*
- *#10-32 x 3/8 screw – 4 each*

If any of these items are missing, contact your Oberon representative.

Step 1 – Slide the Worm Gear Clamps through the slots of the Pole Mount Bracket, and fasten the clamps around the pole (Figure 1). Note, the included clamps only work for poles ranging from 5 inches to 9 inches diameter.

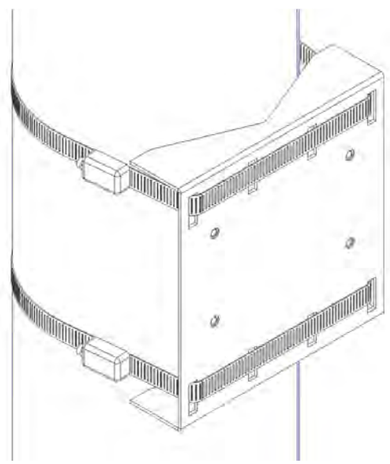

Figure 1 - Pole Mounting Bracket

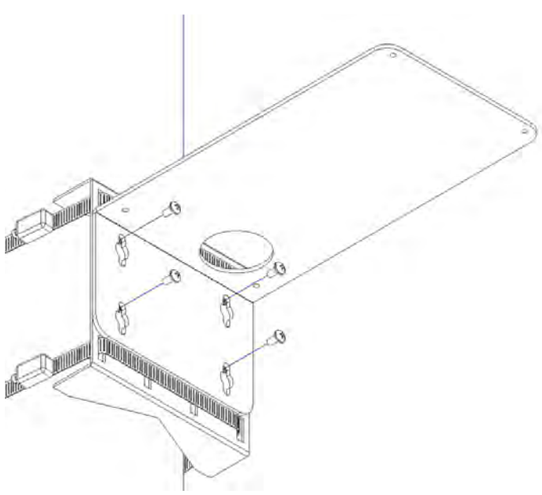

Figure 2 - Right Angle Bracket

Step 2 – Fasten the Right Angle Bracket to the Pole Mount Bracket using the provided #10 screws (Figure 3).

Step 3 – Fasten the enclosure to the Right Angle Bracket with the provided M4 x 10mm screws.

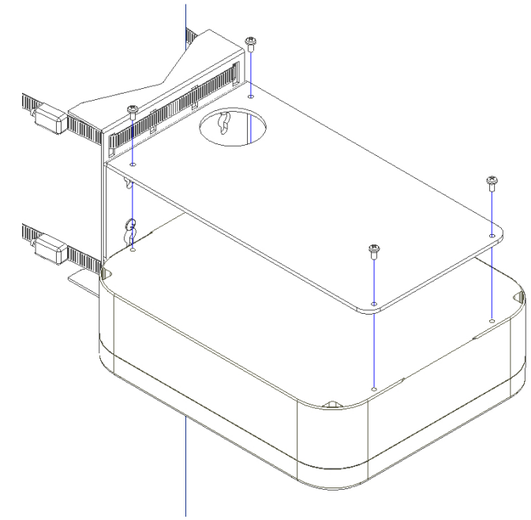

Figure 3 - Enclosure Install

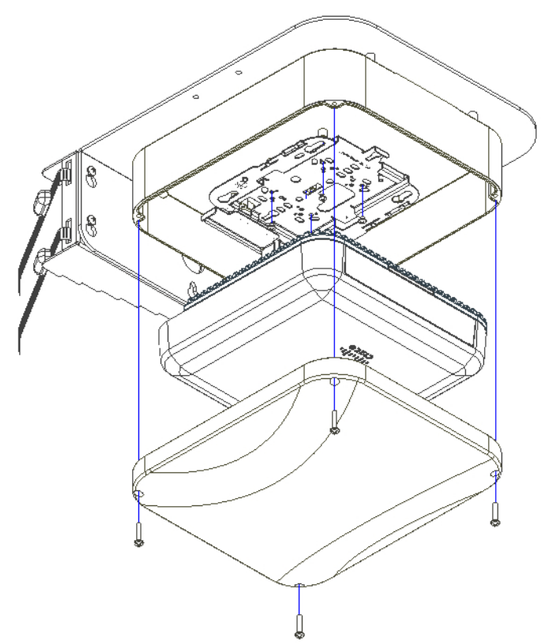

Figure 4 - Access Point Install

Step 3 – Route any cabling as needed, and install the access point with the provided #8 plastic screws. A set of nylon spacers and longer screws are provided to increase the height of the T-Bar if necessary. Screw on the cover to 8 in-lbs for a proper seal using the provided M4 x 20mm self captured screws (Figure 3). Installation is complete.

Copyright 2014