Projector Ceiling Mount

For more information please visit www.btechavmounts.com/BT5890 **BT5890**

BT5890

Projector Ceiling Mount

Designed for LCD/LED/DLP projectors up to 10kg (22lbs)

- Integrated cable management
- Keyhole 'hook-on' feature for easy installation
- +/- 15° tilt adjustment, +/- 15° roll adjustment and 360° swivel
- Maximum distance between any 2 fixing points: 493mm
- Maximum fixing square: 300 x 300mm or 400 x 200mm
- Projector can be mounted directly to the carousel
- Suitable for projectors using M2.5, M3, M4, M5 and M6 fixings
- Supplied with safety bolt for a secure installation
- Additional holes along pole length allow pole to be cut to desired length (not applicable to BT890-100)
- Ceiling fixings and all mounting hardware included
- Available in Black and White
- Available in four lengths

BT5890-010:
Short Drop Projector Ceiling Mount
Ceiling drop: 190mm (7.5")

BT5890-075:
Medium Drop Projector Ceiling Mount
Ceiling drop: 895mm (35.2")

BT5890-100:
Medium Drop Projector Ceiling Mount
Ceiling drop: 1000mm (39.4")

BT5890-150:
Long Drop Projector Ceiling Mount
Ceiling drop: 1645mm (64.8")

Available in Black or White

Supplied with safety bolt for a secure installation

+/- 15° tilt adjustment, +/- 15° roll adjustment and 360° swivel

Integrated cable management

Projector Ceiling Mount

For more information please visit www.btechavmounts.com/BT5890

BT5890

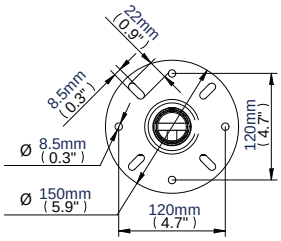

Ceiling Plate

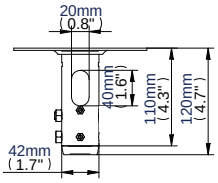

Ceiling Mount

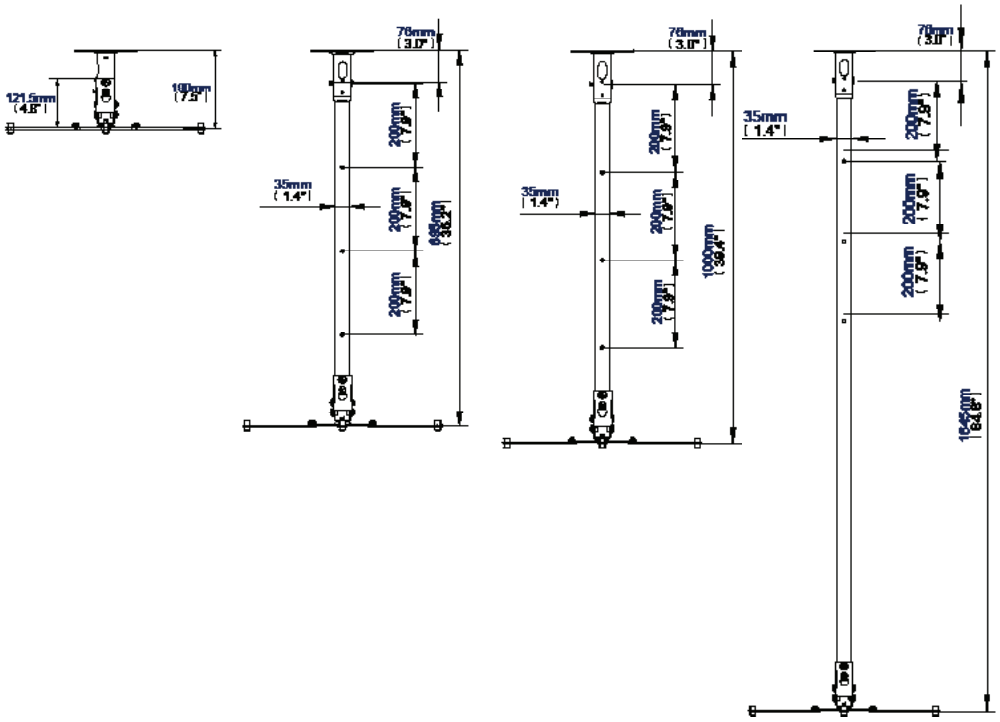

Interface

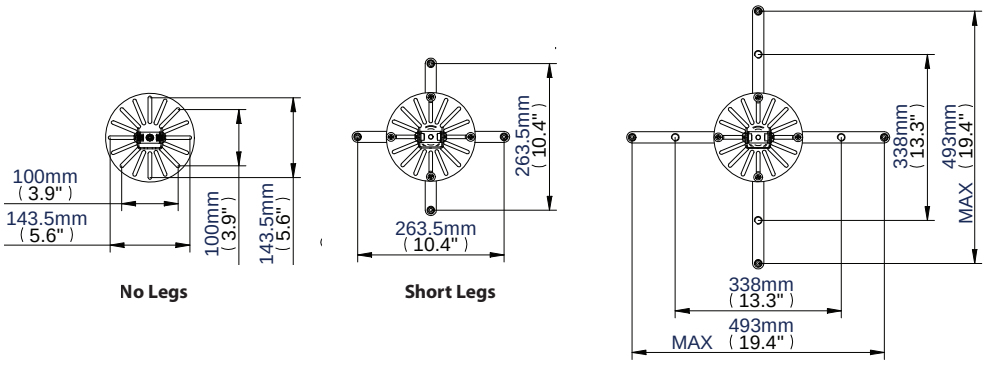

No Legs | Short Legs | Long Legs

Product Code:	Colour:	Order Ref:	EAN Code:
BT5890-075	Black	BT5890-075/B	5019318551130
BT5890-075	White	BT5890-075/W	5019318551147

This information is intended as a guide only and reflects the current specification at the time of print.
B-Tech accepts no liability for the accuracy of the information contained in this document.

© 2011 B-Tech International Limited. All rights reserved.
The information in this specification sheet reflects the current technical specifications at the time of print. We reserve the right to change the technical or physical specifications without prior notice.
The B-Tech name, the B-Tech logo, Better by Design and System V are all registered trademarks of B-Tech International Ltd. All other brands and products are trademarks of their respective owners.
All B-Tech images and symbols are exclusive property of B-Tech International Ltd. B-Tech accept no liability for loss or damage caused by improper installation or mounting on unstable structures.
Any reproduction or retransmission or republication of any part of this specification sheet is strictly prohibited, unless prior written permission has been granted by B-Tech International Ltd. E&OE.