MIC IP starlight 7000 HD

www.boschsecurity.com

BOSCH
Invented for life

- Exceptional strength and ruggedness for any outdoor, industrial, or commercial surveillance application
- Starlight (720p50/60) camera technology with high-performance 30x lens for scenes with limited or non-uniform illumination
- Optional, field-installable combo illuminator (IR/White light) provides detection of objects up to 175 m (575 ft) away
- Simple installation with new hinged DCA mounting accessory and new cable design
- ONVIF conformant; provides interoperability with other conformant systems.

The MIC IP starlight 7000 HD camera has an advanced PTZ platform that was designed using Bosch's domain expertise in material engineering, mechanical design, intelligent imaging, and video streaming.
The camera complies to some of the toughest industry standards such as IP68, NEMA 6P, and IK10 for extreme mechanical strength and durability.
The camera is designed using the latest technology in intelligent imaging and video streaming. Thanks to the intelligent encoding and Content-Based Imaging Technology (CBIT), the HD module delivers high-resolution video even under challenging light conditions at very low bit rates.

Functions

Ruggedized design for extreme applications
The camera is designed to last in surveillance applications that are beyond the mechanical capabilities of normal PTZ domes or conventional positioning systems. The complete metal body has been engineered to withstand high-impact or continuous low-frequency vibration. The camera models comply to IK10 rating for impact resistance and to the IEC 60068 standards applicable to vibration and shock.
With a temperature range of -40 °C to +60 °C (-40 °F to +140 °F), the camera is designed specifically for use in extreme environments around the world.
The camera benefits from Bosch Automotive domain knowledge in material engineering and coatings. As a result, the superior metallurgy and the finish of the camera provide unprecedented protection against corrosion, meeting the ASTM B117 standard for corrosion resistance.

Intelligent Defog
Users can configure the mode to be active continuously, or to activate automatically when the video analytics in the camera detect fog and add light to the video image (and then deactivate when the fog clears or the scene changes).

Integrated wiper
Regardless of the weather, the MIC camera is able to capture the highest possible quality image all year long, thanks to its integrated, long-life silicone wiper.

Window-defrosting function
In addition, the camera incorporates an internal long-life blower that directs warm air towards the inside of the front window of the camera, providing an effective window-defrosting function.

High-performance imaging platforms
Image control and quality are integral aspects of any PTZ camera, and the MIC IP starlight 7000 HD camera delivers outstanding clarity and image detail.
The camera has a professional-grade imaging platform capable of delivering 720p50/60 HD resolution in environments with ambient light extremes. The camera also has a 30x optical zoom lens (12x digital zoom) and flexible mounting options (upright, inverted, or canted) to achieve the perfect field of view.
Day/night capabilities and outstanding sensitivity make the camera an exceptional performer in all lighting conditions. In low light, the camera automatically switches from color to monochrome by removing the IR filter to boost sensitivity, while maintaining superior image quality. For operation in the darkest conditions, automatic control of shutter speeds increases sensitivity by more than 50 times.
Starlight models have a 720p50/60 HD imaging platform with starlight technology. The camera produces detailed video images in scenes with limited ambient lighting, without any motion blur associated with cameras that use slow shutters. The camera has been tuned to deliver high-quality HD video in both day and night operation.

Sodium vapor lamp white balance
The camera is an exceptional performer when capturing video under a sodium vapor lamp (a street lamp or tunnel lamp, for example). Uncorrected images under these conditions have a yellowish tint, which can make identification difficult. In the Sodium Vapor White Balance mode, the camera automatically compensates for the light from a sodium vapor lamp to restore objects to their original color.

Dual-mode Illumination
The field-installable MIC illuminator accessory (sold separately) enables Detection of objects 175 m (575 ft) away using IR light. Unique 3D Diffuser technology ensures even illumination across the entire scene. Ensuring long-term reliability, the patented, integrated Constant Light technology automatically controls and adjusts output to deliver a consistent level of illumination performance throughout the life of the product, even when operating in fluctuating temperatures. The illuminator accessory consists of both IR and White light LEDs .Operators can switch between the two light sources with a single click.

Five (5) pre-programmed user modes
Five pre-programmed but configurable user modes, optimized with the best settings for a variety of typical applications, make on-site programming easy and user-friendly. Users select from the menu the mode that best defines the environment in which the camera is installed:

- General – Default mode. Suitable for most applications.
- Motion – Optimized to minimize motion artifacts, such as when monitoring traffic or fast-moving objects.
- Low light – Optimized performance for scenes with low light level.
- Indoor – Optimized for scenes with indoor lighting, and avoids the limitations imposed by the sun or street lighting.
- Vibrant – Provides enhanced contrast, color reproduction, and sharpness.
- Illuminator – Optimized performance when using the MIC illuminator accessory.

Users have the ability to customize these modes, if necessary, for the specific requirements of the site.

Image Stabilization
As PTZ cameras continue to increase their optical zoom capabilities, image stabilization becomes critical to eliminate movement caused by unstable camera mounts. Minor movement of the camera mount can shift the field of view by a large distance when the camera is zoomed to a high value. This can render images unusable. The camera incorporates an Image Stabilization algorithm that allows the camera to detect continuous vibration. If it detects vibration, the camera dynamically corrects the shaky video in both the vertical and horizontal axis, resulting in exceptional image clarity and a stable field of view on the monitor.

Superior privacy masking
The camera allows for a total of 24 individual privacy masks, with up to eight displayed in the same scene. These can be programmed with four corners each. Each mask changes size and shape smoothly and quickly, ensuring that the covered object cannot be seen.

Sophisticated alarm responses
The camera supports advanced alarm control that uses sophisticated rules-based logic to determine how to manage alarms. In its most basic form, a “rule” could define which input(s) should activate which output(s). In a more complex form, inputs and outputs can be combined with pre-defined or user-specified commands to perform advanced camera functions.

PTZ drive and mechanism
With a full 360º continuous rotation pan and 290º tilt control (on upright models without illuminators) and super-quick pan (120°/second) and tilt (60°/second) for exceptional viewing capability, the camera outperforms other cameras in its class. Small increment pan speeds from just 0.2º/second to 120º/second gives the user precise control. This speed

control is especially important when used with video analytic systems, particularly for tracking subjects when fully zoomed in.
The AutoScaling (proportional zoom) and AutoPivot (automatically rotates the camera) features ensure optimal control.
The camera supports 256 pre-positions and four separate Guard Tours. A standard preset tour has capability for up to 256 pre-positions, with a configurable dwell time between pre-positions. A custom preset tour has capability for up to 64 pre-positions that can be programmed in any order with a configurable dwell time between pre-positions. Two record/playback tours allow recording of the camera movements that an operator makes, including pan, tilt, and zoom, and can be played back in a continuous manner. The total duration of record/playback tours can be up to a maximum of 30 minutes. The duration varies depending on the amount of commands sent to the camera during recording.

Content Based Imaging Technology
Content Based Imaging Technology (CBIT) is used to radically improve image quality in all lighting conditions and to identify areas for enhanced processing. The camera examines the scene using intelligent video analytics and provides feedback to re-tune the image processing. This provides better detail in the areas that matter and better all-round performance. The Intelligent Defog technology, for example, allows you to view video clearly through a foggy scene or can improve contrast in dark areas of a scene.

Noise reduction features reduce bandwidth and storage requirements
The camera uses advanced noise reduction algorithms to analyze the scene and reduce noise artifacts.
The low-noise image and the efficient H.264 compression technology combine to provide clear images while reducing bandwidth and storage compared to other H.264 cameras. This results in reduced-bandwidth streams that still retain a high image quality and smooth motion. The camera provides the most usable image possible by cleverly optimizing the detail-to-bandwidth ratio.

Bitrate optimized profile
The average typical optimized bitrate in kbits/s for various frame rates is shown in the table:

IPS	720p	480p
60	2600	2000
30	1300	1000
15	1100	800
10	1000	700
5	600	450
2	270	200

Actual bitrate may vary depending on the scene complexities and encoding configurations.

Intelligence
With built-in Intelligent Video Analysis (IVA), the camera reinforces the concept of Intelligence at the Edge. IVA is Bosch's state-of-the-art intelligent video content analysis technology. With IVA, the camera reliably detects and analyzes moving objects while suppressing unwanted alarms from spurious sources in the image. IVA also allows the camera to detect multiple object behaviors including idle and removed objects, loitering, multiple line crossing, and trajectories. IVA supports BEV (Bird's-Eye-View) People Counter and Assisted Self-Calibration. Configurable detection filters improve reliability and reduce operator work load.

Intelligent Tracking
The camera utilizes the built-in Intelligent Video Analytics (IVA) to follow an individual or an object continuously. Objects detected by IVA when the camera is in a stationary position activate the Intelligent Tracking feature, which controls the pan/tilt/zoom actions of the camera to keep the tracked object in the scene.
The new Intelligent Tracking is based on robust flow detection algorithms which can reliably track moving objects even under challenging scenes.
The tracking and detection reliability can be enhanced further with virtual masking for scenes with a lot of background motion such as trees or other objects creating constant motion in the scene.
The camera supports three modes for Intelligent Tracking:

- Auto mode: When configured in this mode, the camera actively analyzes the video to detect any moving object. If it detects movement, it begins to track the object. This mode is most useful for scenarios where no motion is expected in the scene.
- Click mode: In this mode, users can click an object moving in the live video image to enable the camera to track the movement of the selected object. This mode is most useful for scenarios where normal scene activity is expected.
- IVA-triggered mode: In this mode, the camera continuously analyzes the scene for IVA alarms or IVA rule violations. If an IVA rule is violated, it triggers the advanced tracking feature of the camera to start following the object / person that triggered the alarm. This unique combination of robust IVA and Intelligent Tracking allows the camera to track moving objects of interest without getting distracted by other moving objects in the scene.

Virtual masking
The camera offers Virtual Masking, which gives users flexibility to mask parts of the scene which should not be considered for flow analysis to trigger Intelligent

Tracking. This allows users to mask from IVA/Tracking any background motion (moving trees, pulsating lights, and busy roads) in the scene without blocking the motion from the video.

Common product platform (CPP4)
The camera has an advanced, efficient H.264 encoder (CPP4) embedded for high quality HD streaming video and very efficient streaming and network capabilities. The new platform supports simultaneous streaming of individually configurable HD streams, and allows a choice of HD resolution in combination of SD resolutions.

Advanced streaming
The camera offers advanced streaming capabilities so that you can configure the camera to take advantage of the latest network technology.
The camera is designed on the most efficient and powerful H.264 encoding platform capable of delivering high-quality HD video with very low network load. The new intelligent encoding capabilities drops the bandwidth consumption to extremely low levels if the camera detects no motion in the scene.
The camera is capable of quad streaming which allows the camera to be configured to deliver independent, configurable streams for live viewing, recording, or remote monitoring on constrained bandwidths.

ONVIF conformant
The camera conforms to the ONVIF (Open Network Video Interface Forum) specification which guarantees interoperability between network video products regardless of manufacturer. The ONVIF Profile S specification allows easy integration with other conformant devices and VMS. ONVIF conformant devices are able to exchange live video, audio, metadata, and control information, and ensure that they are automatically discovered and connected to network applications such as video management systems.

Ease of installation
The camera has been designed for quick and easy installation, a key feature from Bosch IP video security products.
The camera supports mounting in upright, inverted, or canted orientation. The field-selectable canting option allows the upper section of the camera to be tilted down at a 45° angle. This is very useful for installations that require a view of the scene directly under the camera. No matter the installation position, the camera will provide the perfect field of view.
The MIC Series has a wide range of mounting accessories, including a new *Hinged* DCA mount, a wall mount, a corner mount, and a pole mount. In addition, a sunshield is available for camera installations in hot, sunny locations.
The MIC Hinged DCA (MIC-DCA-Hx) provides a convenient mounting point for a MIC camera.
The hinge feature allows installers to “hang” the MIC7000 camera temporarily during installation for easier connection of cables/wiring before final bolts are installed.
Made from cast aluminum, the hinged DCA is deeper than the standard MIC-DCA in order to easily accommodate the connections from the base of the camera, and has two M25 holes (or 3/4 in. NPT holes using the conduit adapter (male M25 to female 3/4" NPT) (Available in specific regions only.)) to accept weatherproof conduit or cable glands. An O-ring provides an IP68-rated seal between the base of the camera and the top of the DCA.
For installations in locations that require additional protection for the camera’s electrical connectors, a special weatherproof kit is available. The kit includes IP67-rated watertight glands that seal the connectors to prevent damage from high humidity or moisture condensation.
Bosch offers several power/control accessories, including a high-capacity 24 VAC power supply, and an inexpensive ‘alarm/washer’ interface accessory unit to connect external alarm signals and control optional external washer pump devices.
If a more sophisticated installation is required, connect the camera to the advanced accessory named VIDEOJET connect, which includes an integrated HPoE network connection, two standard network interfaces, integrated Bosch transcoder technology, Compact Flash-based local storage, a built-in network switch, alarm/washer control interfaces, audio in, and two sockets for SFP-based network fiber optic modules.

Robust design rated to an industry-leading IP68, Type 6P, IK10
Subjected and certified to rigorous dust and immersion tests (IP68, Type 6P) and impact test (IK10), MIC Series cameras are perfectly suited for installation in even the most unforgiving environments. The cameras’ aluminum housing receives a corrosion protection surface treatment, along with robust, powder coat paint. Reliable O-ring seals completely protect the internal components from the external environment, meaning that there is no need to pressurize the camera. To guarantee the seal, the factory submerges each MIC camera to ensure seal integrity before shipping.

Dual power options
The camera can be powered by a network compliant to High Power-over-Ethernet (Bosch’s version of High PoE) using a Bosch model of High PoE Midspans (sold separately). With this configuration, only a single (Cat5e/Cat6e) cable connection is required to view, to power, and to control the camera.
The camera can also accept a standard 24 VAC power source if a High PoE network interface will not be used. User-supplied wiring must be in compliance with electrical codes (Class 2 power levels).

For maximum reliability, the camera can be connected simultaneously to a High PoE Midspan and a separate 24 VAC power source. If High PoE and 24 VAC are applied simultaneously, the camera usually selects auxiliary input (24 VAC) and will draw minimal power from the High PoE Midspan. If the 24 VAC power source fails, the camera switches power input seamlessly to High PoE. After the 24 VAC power source is restored, the camera switches power input again to 24 VAC.
The 60 W midspan (NPD-6001A) can supply power to models without an illuminator accessory. The 95 W midspan (NPD-9501A) can supply power to all models of MIC7000, including models with the illuminator accessory.
Refer to the table in the Installation/configuration notes section for more information.

Backwards compatibility
While the MIC ITS camera can be connected directly to an IP network for live viewing and recording, it also offers installers the flexibility to integrate into an analog CCTV system. With the addition of a Bosch decoder, customers can access the high-performance features of MIC ITS cameras within existing analog infrastructures without investing in an entire system upgrade. Video and control connections from the decoder can be connected to a matrix switcher/ controller system, or directly to an analog monitor sitting near a serial controller/keyboard.

Easy upgrade
Remotely upgrade the camera whenever new firmware becomes available. This ensures up-to-date products, thus protecting investment with little effort.
As with all Bosch products, the camera is designed using the industry's best design process and is subjected to the most stringent testing standards such as HALT (highly accelerated life testing), which pushes the limits of products to ensure reliability throughout their lifetime.

Camera Diagnostics
The camera has several built-in sensors / advanced diagnostics that display warnings on the camera's OSD about the health of the camera. The diagnostics log records the events such as:

- Low voltage - a drop in incoming power below the level where the camera becomes non-functional
- High temperature - the internal temperature exceeds specifications
- Low temperature - the internal temperature exceeds minimum levels
- High humidity - the internal humidity exceeds 70%
- High vibration - the acceptable level of acceleration forces was exceeded
- Total hours of camera operation
- Illuminator aging history

Certain events also appear on the camera's OSD. These diagnostic records are available for the installation or service technician to review.

Certifications and approvals

HD standards
Complies with the SMPTE 296M-2001 Standard in:

- Resolution: 1280x720
- Scan: Progressive
- Color representation: complies with ITU-R BT.709
- Aspect ratio: 16:9
- Frame rate: 50 and 60 frames/s

Electromagnetic Compatibility (EMC)	Complies with FCC Part 15, ICES-003, and CE regulations, including latest versions of EN 50130-4, EN 55022:2006 inc. AL:2007, EN 61000-3-3, EN 61000-6-1, EN 61000-6-2, and EN 50121-4 (Railway applications)
Product Safety	Complies with UL, CE, CSA, EN, and IEC Standards 60950-1 & 22
Ingress Protection Rating / Standard	IP68 (1m submersion for 24 hrs) NEMA 6P
IK Code	IK10
Salt spray	ASTM B117

Installation/configuration notes

CAMERA MODELS	60 W midspan	95 W midspan	VIDEOJET connect	24 VAC PSU
Models with illuminator		X	X	X
Models without illuminator	X	X	X	X

The table below identifies the power devices that can be connected simultaneously to the camera.

If power is supplied from:	Camera can receive power simultaneously from:
60 W midspan (NPD-6001A)	24 VAC PSU (VG4-A-PSU1, VG4-A-PSU2)
95 W midspan (NPD-9501A)	
VIDEOJET connect (VJC-7000-90)	

Parts included

One (1) MIC IP starlight 7000 HD Camera (MIC71xx)
One (1) Quick Installation Guide
One (1) Document DVD

One (1) spanner tool [to remove and to attach the yoke caps in order to cant the camera if desired, and to remove the access plug from the camera head when installing the optional illuminator accessory (sold separately)]
One (1) base gasket
One (1) RJ45 coupler
Four (4) MAC address labels
One (1) ground screw

Technical specifications

MIC IP starlight 7000 HD camera [720p60 models]

Imager	1/3-type Exmor CMOS sensor
Effective Picture Elements (Pixels)	1305 x 1049 (1.37 MP)
Lens	30x Zoom 4.3 mm to 129 mm F1.6 to F4.7
Field of View (FOV)	2.1° to 59°
Focus	*Automatic with manual override*
Iris	*Automatic with manual override*
Digital Zoom	*12x*

Sensitivity / Minimum Illumination (typical)	30 IRE	50 IRE
Day Mode (Color)		
Fixed shutter 1/30, High Sensitivity mode On	0.052 lux	0.166 lux
Fixed shutter 1/30, High Sensitivity mode Off	0.26 lux	0.66 lux
SensUp On (max. ¼), High Sensitivity mode On	0.0082 lux	0.033 lux
Night Mode (Black and white)		
Fixed shutter 1/30, High Sensitivity mode On	0.0103 lux	0.041 lux
Fixed shutter 1/4, High Sensitivity mode On	0.00129 lux	---
SensUp On (max. ¼), High Sensitivity mode On	0.00065 lux	0.00205 lux

Additional Camera Settings

Gain Control	Auto/Manual/Max
Aperture Correction	Horizontal and vertical
Electronic Shutter Speed (AES)	1/1 sec to 1/10000 sec (22 steps)
Dynamic Range	90 dB typical
Signal-to-Noise Ratio (SNR)	>50 dB
Backlight Compensation (BLC)	On/Off
White Balance	2000 K to 10,000 K ATW, AWB Hold, Extended ATW, Manual, Sodium Lamp Auto, Sodium Lamp
Day/Night	Monochrome, Color, Auto
Defog mode feature	Improves visibility when viewing foggy or other low-contrast scenes.

Mechanical

Drive Unit	Brushless, integral pan/tilt motor drive
Pan Range	360° continuous rotation
Tilt Angle	Without illuminators (camera upright): 290° Without illuminators (camera inverted): 250° With illuminators: 186.6°
Tilt Range	Upright unit: -55° - +90° Canted unit: -90° - +90°
Variable Pan Speed	0.2°/second - 120°/second
Variable Tilt Speed	0.2°/second - 60°/second
Pre-position Speed	120°/second
Preset Accuracy	0.17° (typical)
Proportional Pan / Tilt to Zoom	Yes
Zoom Movement Speed	<5 seconds (optical Wide to optical TELE)
	<7.5 seconds (optical Wide to digital TELE)
Audible Noise	<65dB

Electrical

Input Voltage	21-30 VAC, 50/60 Hz and/or Ethernet High PoE cable connection (56 VDC)
Power Consumption	Without illuminator: 40 W maximum With illuminator: 70 W maximum

Communications / Software Control

Camera Setup/Control	Via Internet Explorer web browser version 7.0 or later, Bosch Configuration Manager, Bosch Video Management System (BVMS), Bosch Video Client (BVC), or support for third party software
Software Update	Network firmware upload

Serial protocols	Bosch OSRD, Pelco P/D, and Forward Vision (Requires connection to a Bosch decoder and camera firmware 6.1 or later)

Network

Standards / Video compression	H.264 (ISO/IEC 14496-10), M-JPEG, JPEG
Streaming	Four (4) streams with individually configurable frame rate and resolution: • Two (2) independently configurable H.264 recording streams • Two (2) non-recording streams (profiles)
Stream 1 (recording)	Options are: - H.264 MP 720p50/60 fixed; - H.264 MP SD
Stream 2 (recording)	Options vary depending on Stream 1 selection. Options with "H.264 MP 720p50/60 fixed" selected for Stream 1: - Copy Stream 1 - H.264 MP SD; - H.264 MP 720p6/7 fixed; - H.264 MP upright (cropped); - H.264 MP D1 4:3 (cropped); Option with "H.264 MP SD" selected for Stream 1: H.264 MP SD
Non-recording profiles	Two (2) streams, I-frame only Options are: - HD Image Optimized; - HD Balanced; - HD Bit Rate Optimized; - SD Image Optimized; - SD Balanced; - SD Bit Rate Optimized; - DSL Optimized; - 3G Optimized
Resolution (H x V)	
720p HD	1280 x 720
432p SD	768 x 432
288p SD	512 x 288
144p SD	256 x 144
Protocols	IPv4, IPv6, UDP, TCP, HTTP, HTTPS, RTP/RTCP, IGMP V2/V3, ICMP, ICMPv6, RTSP, FTP, Telnet, ARP, DHCP, APIPA (Auto-IP, link local address), NTP (SNTP), SNMP (V1, MIB-II), 802.1x, DNS, DNSv6, DDNS (DynDNS.org, selfHOST.de, no-ip.com), SMTP, iSCSI, UPnP (SSDP), DiffServ (QoS), LLDP, SOAP, Dropbox, CHAP, digest authentication
Ethernet	10BASE-T/100BASE-TX, auto-sensing, half/full duplex
Encryption	TLS 1.0, SSL, DES, 3DES, AES
Ethernet connector	RJ45
Connectivity	ONVIF Profile S, Auto-MDIX
GOP Structure	IP, IBP, IBBP
Data Rate	9.6 kbps to 6 Mbps
Overall IP Delay	240 ms (typical)

Miscellaneous

Sectors / Titling	16 independent sectors with 20 characters per title
Privacy Masking	24 individually configurable privacy masks
Virtual Masking	24 individually configurable masks to hide parts of the scene (background motion such as moving trees, pulsating lights, busy roads, etc.) which should not be considered for flow analysis to trigger Intelligent Tracking.
Pre-positions	256, each with 20 characters per title
Guard Tours	Two (2) types of tours: • Recorded tours - two (2), maximum total duration 30 minutes (depending on amount of commands sent during recording) • Preset tour - one (1), consisting of up to 256 scenes consecutively, and (1) customized up to 64 scenes
Supported Languages	English, Czech*, Dutch, French, German, Italian, Polish, Portuguese, Russian*, Spanish * Available with separate language upload

User Connections

Power, Network	Without illuminator: RJ45 100BASE-TX Ethernet High PoE midspan - 60 W (NPD-6001A) or 95 W (NPD-9501A) With illuminator: High PoE 95 W midspan (NPD-9501A)*
Power, Camera	24 VAC (power supply)
Video and Control	RJ45 100BASE-TX Ethernet RS-485 Simplex 9600 baud (dedicated for MIC-ALM-WAS-24)
Alarm/Washer	3-wire RS-485

* Must purchase either NPD-9501A or VIDEOJET connect 7000 in order to use the High PoE solution.

Environmental

Note: Unit includes internal heater and fan.

Ingress Protection Rating/ Standard	IP68 NEMA 6P, when using installed MIC-DCA or MIC wall mount IP67 (moisture and dust) rating on connectors in the base of the camera
External Mechanical Impact (IK Code or Impact rating)	IK10
Operating Temperature	-40 °C to +60 °C (-40 °F to +140 °F)
NEMA TS 2-2003 (R2008), para 2.1.5.1 using fig. 2.1 test profile	-34 ºC to +74 ºC (-30 ºF to +165 ºF)
Storage Temperature	-60 °C to +70 °C (-76 °F to +158 °F)
Humidity	0-100%
Wind Load	209 km/h (130 mph) (sustained) (Gusts up to 290 km/h (180 mph)) Effective Projected Area (EPA): 0.044m² (0.47 ft²)
Vibration	IEC 60068-2-6, Test Fc: Vibration (sinusoidal), 20m/s² (2.0g) Sinusoidal vibration test IAW MIL-STD-167-1A
Shock	IEC 60068-2-7, Test Ea: Shock, 20g Medium weight Hammer Shock IAW MIL-S-901D

Construction

Dimensions (W x H x D)	Without illuminator accessory or sunshield: *Upright, Inverted:* 217.75 mm x 368.89 mm x 178.33 mm (8.57 in. x 14.52 in. x 7.02 in.) *Canted:* 217.75 mm x 330.96 mm x 239.68 mm (8.57 in. x 13.03 in. x 9.44 in.) Without illuminator accessory, but with sunshield: *Upright, Inverted:* 217.75 mm x 372.20 mm x 178.33 mm (8.57 in. x 14.65 in. x 7.02 in.) *Canted:* 217.75 mm x 334.27 mm x 239.68 mm (8.57 in. x 13.16 in. x 9.44 in.) With illuminator accessory: *Upright, Inverted:* 217.75 mm x 439.91 mm x 178.33 mm (8.57 in. x 17.32 in. x 7.02 in.) *Canted:* 217.75 mm x 401.98 mm x 239.68 mm (8.57 in. x 15.83 in. x 9.44 in.)
Weight	6.7 kg (14.7 lb)
Window	Tempered flat glass
Construction Material	Cast solid aluminum
Window Wiper	Standard, long-life silicone wiper
Sunshield (to prevent sun load in hot climates)	Optional; sold separately
Canting	On-site canting functionality

Dimensional Drawings

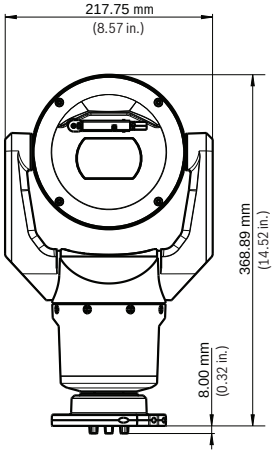

Front view - upright

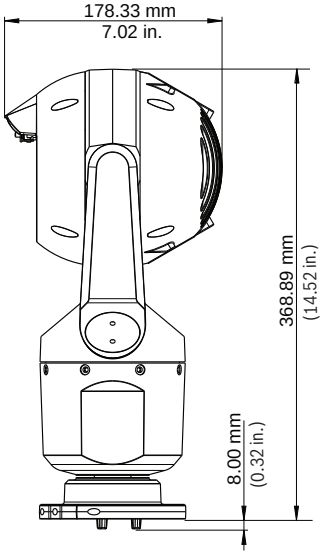

Side view - upright

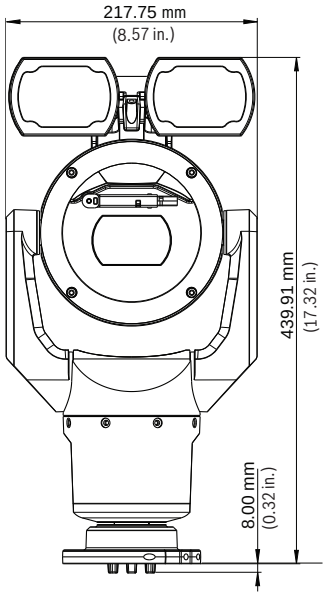

Front view, with illuminator - upright

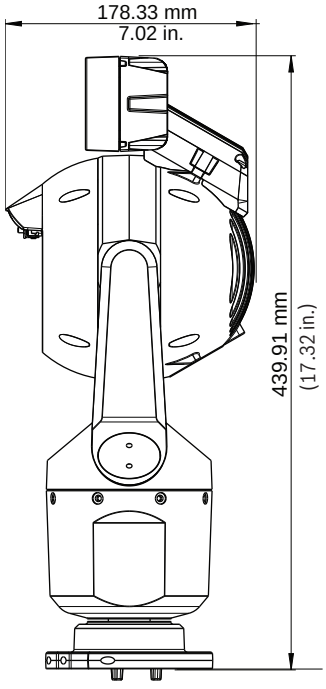

Side view, with illuminator - upright

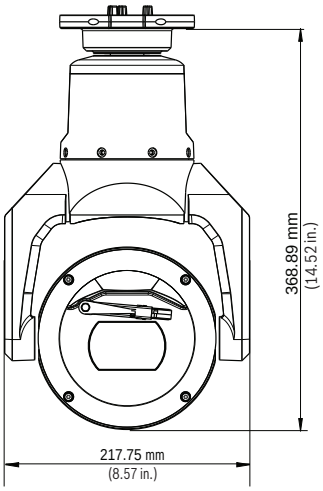

Front view - inverted

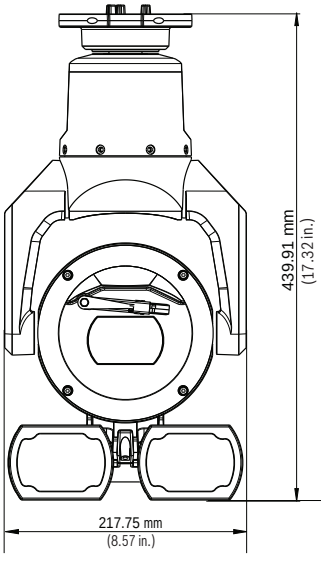

Front view, with illuminator - inverted

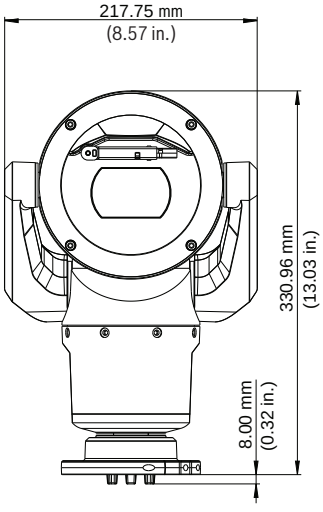

Front view - canted

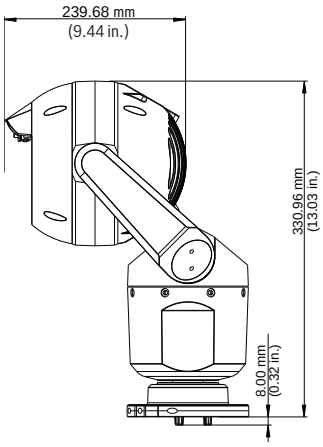

Side view - canted

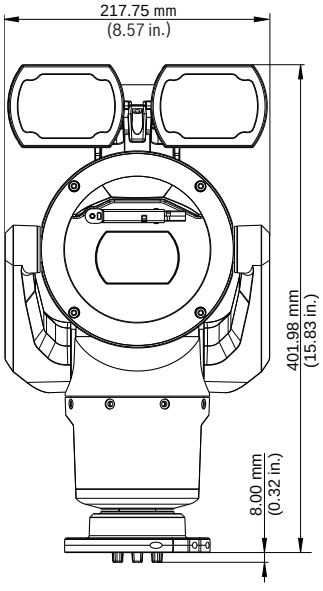

Front view, with illuminator - canted

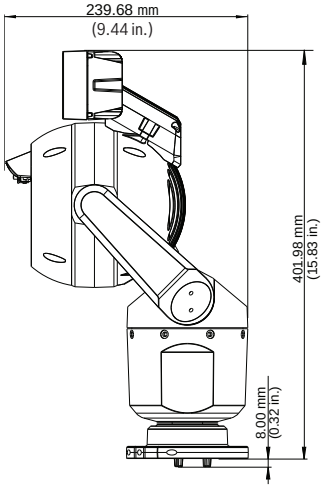

Side view, with illuminator - canted

Ordering information

MIC-7130-PB4 Ruggedized HD Camera
Ruggedized 720p50/60 HD PTZ day/night camera with 30x zoom, excellent low-light imaging; PoE; IVA. Easy install with hinged DCA mount (sold separately).
Optional illuminator (sold separately).
Black (RAL 9005). Sand finish.
Order number **MIC-7130-PB4**

MIC-7130-PW4 Ruggedized HD Camera
Ruggedized 720p50/60 HD PTZ day/night camera with 30x zoom, excellent low-light imaging; PoE; IVA. Easy install with hinged DCA mount (sold separately).
Optional illuminator (sold separately).
White (RAL 9010). Sand finish.
Order number **MIC-7130-PW4**

MIC-7130-PG4 Ruggedized HD Camera
Ruggedized 720p50/60 HD PTZ day/night camera with 30x zoom, excellent low-light imaging; PoE; IVA. Easy install with hinged DCA mount (sold separately).
Optional illuminator (sold separately).
Grey (RAL 7001). Available in specific regions only.
Sand finish.
Order number **MIC-7130-PG4**

Accessories

MIC-ILB-100 Illuminator, IR/White light combo, Black
Illuminator accessory for MIC7000 Series.
Combination of IR (850 nm) + White light (6700K) LEDs.
Black (RAL 9005). Sand finish.
Order number **MIC-ILB-100**

MIC-ILW-100 Illuminator, IR/White light combo, White
Illuminator accessory for MIC7000 Series.
Combination of IR (850 nm) + White light (6700K) LEDs.
White (RAL 9010). Sand finish.
Order number **MIC-ILW-100**

MIC-ILG-100 Illuminator, IR/White light combo, Grey
Illuminator accessory for MIC7000 Series.
Combination of IR (850 nm) + White light (6700K) LEDs.
Grey (RAL 7001). Available in specific regions only.
Sand finish.
Order number **MIC-ILG-100**

High PoE Midspan, 95 W, single port, AC in
High PoE, 95 W, Single Port Midspan with AC in
Order number **NPD-9501A**

High PoE Midspan, 60 W, single port, AC in
High Power, 60 W Single Port PoE Midspan with AC in
Order number **NPD-6001A**

VG4-A-PSU1 120 VAC Power Supply Unit
Power supply with transformer, 120 VAC input, for an AUTODOME or MIC7000 Series PTZ camera. White, aluminum enclosure with cover, rated IP66 and IK 08. 100 W output. Optional trim skirt (sold separately).
Order number **VG4-A-PSU1**

VG4-A-PSU2 230 VAC Power Supply Unit
Power supply with transformer, 230 VAC input, for an AUTODOME or MIC7000 Series PTZ camera. White, aluminum enclosure with cover, rated IP66 and IK 08. 100 W output. Optional trim skirt (sold separately).
Order number **VG4-A-PSU2**

VIDEOJET connect 7000
95 W, PoE IP power supply unit, 100 VAC - 240 VAC (90 VAC - 264 VAC with tolerance considered), 50/60 Hz
Order number **VJC-7000-90**

MIC7000 Alarm/Washer Interface Unit
Interface box for alarms and washer pump connections for MIC7000 cameras, 24 VAC. Impact-resistant polycarbonate enclosure, rated to IP67 and NEMA 4X, with four (4) watertight glands. Grey (RAL 7035).
Order number **MIC-ALM-WAS-24**

MIC-DCA-HB MIC Hinged DCA, Black
DCA mount for a MIC7000 camera. Hinge allows camera to hang temporarily during installation for easier connection of cables/wiring. Aluminum. Two M25 holes for conduit/cable glands.
Black (RAL 9005). Sand finish.
Order number **MIC-DCA-HB**

MIC-DCA-HBA MIC Hinged DCA with Adapter, Black
DCA mount for a MIC7000 camera. Hinge allows camera to hang temporarily during installation for easier connection of cables/wiring. Aluminum. Two M25 holes for conduit/cable glands. Includes an conduit adapter (male M25 to female 3/4" NPT). Available in specific regions only.
Black (RAL 9005). Sand finish.
Order number **MIC-DCA-HBA**

MIC-DCA-HW MIC Hinged DCA, White
DCA mount for a MIC7000 camera. Hinge allows camera to hang temporarily during installation for easier connection of cables/wiring. Aluminum. Two M25 holes for conduit/cable glands.
White (RAL 9010). Sand finish.
Order number **MIC-DCA-HW**

MIC-DCA-HWA MIC Hinged DCA with Adapter, White
DCA mount for a MIC7000 camera. Hinge allows camera to hang temporarily during installation for easier connection of cables/wiring. Aluminum. Two M25 holes for conduit/cable glands. Includes an conduit adapter (male M25 to female 3/4" NPT). Available in specific regions only.
White (RAL 9010). Sand finish.
Order number **MIC-DCA-HWA**

MIC-DCA-HG MIC Hinged DCA, Grey
DCA mount for a MIC7000 camera. Hinge allows camera to hang temporarily during installation for easier connection of cables/wiring. Aluminum. Two M25 holes for conduit/cable glands.
Grey (RAL 7001). Available in specific regions only. Sand finish.
Order number **MIC-DCA-HG**

MIC-DCA-HGA MIC Hinged DCA with Adapter, Grey
DCA mount for a MIC7000 camera. Hinge allows camera to hang temporarily during installation for easier connection of cables/wiring. Aluminum. Two M25 holes for conduit/cable glands. Includes an conduit adapter (male M25 to female 3/4" NPT). Available in specific regions only.
Grey (RAL 7001). Sand finish.
Order number **MIC-DCA-HGA**

MIC-WMB-BD Wall Mount Bracket, Black
Wall mount bracket, black sand finish (RAL9005)
Order number **MIC-WMB-BD**

MIC-WMB-WD Wall Mount Bracket, White
Wall mount bracket, white sand finish (RAL9010)
Order number **MIC-WMB-WD**

MIC-WMB-MG Wall Mount Bracket, Grey
Wall Mount Bracket.
Grey (RAL 7001). Available in specific regions only. Sand finish.
Order number **MIC-WMB-MG**

MIC-PMB Pole Mount Bracket
Pole mount bracket (includes 2 x 455 mm stainless steel banding straps for pole diameters 75 to 145 mm)
Order number **MIC-PMB**

MIC-CMB-BD Corner Mount Bracket, Black
Corner mount bracket, black sand finish (RAL9005)
Order number **MIC-CMB-BD**

MIC-CMB-WD Corner Mount Bracket, White
Corner mount bracket, white sand finish (RAL9010)
Order number **MIC-CMB-WD**

MIC-CMB-MG Corner Mount Bracket, Grey
Corner mount bracket.
Grey (RAL 7001). Available in specific regions only. Sand finish.
Order number **MIC-CMB_MG**

MIC-SPR-BD Spreader Plate, Black
Aluminum spreader plate suitable for brickwork surface mounting, black sand finish (RAL9005)
Order number **MIC-SPR-BD**

MIC-SPR-WD Spreader Plate, White
Aluminum spreader plate suitable for brickwork surface mounting, white sand finish (RAL9010)
Order number **MIC-SPR-WD**

MIC-SPR-MG Spreader Plate, Grey
Aluminum spreader plate suitable for brickwork surface mounting.
Grey (RAL 7001). Available in specific regions only.
Sand finish.
Order number **MIC-SPR-MG**

MIC-SCA-BD Shallow Conduit Adapter, Black
Shallow conduit adapter for a MIC-WMB, a MIC-PMB, or a MIC-SPR, black sand finish (RAL9005)
Order number **MIC-SCA-BD**

MIC-SCA-WD Shallow Conduit Adapter, White
Shallow conduit adapter for a MIC-WMB, a MIC-PMB, or a MIC-SPR mount, white sand finish (RAL9010)
Order number **MIC-SCA-WD**

MIC-SCA-MG Shallow Conduit Adapter, Grey
Shallow conduit adapter for a MIC-WMB, a MIC-PMB, or a MIC-SPR.
Grey (RAL 7001). Available in specific regions only.
Sand finish.
Order number **MIC-SCA-MG**

MIC-67SUNSHLD
Three-part molded sunshield for MIC7000 cameras – 1 bottom shell, 2 top shells (1 for around the optional illuminator accessory). White.
Order number **MIC-67SUNSHLD**

MIC7000 IP67 Connector Kit, 5Pack
Order number **MIC-IP67-5PK**

MIC-WKT-IR Washer Kit
Washer kit for analog infrared MIC camera models and for MIC7000 camera models only. Includes washer nozzle and mounting brackets for wall or 101.6 mm (4 in.) PCD base. Requires washer pump, purchase separately.
Order number **MIC-WKT-IR**

Represented by:

North America:
Bosch Security Systems, Inc.
130 Perinton Parkway
Fairport, New York, 14450, USA
Phone: +1 800 289 0096
Fax: +1 585 223 9180
security.sales@us.bosch.com
www.boschsecurity.us

Europe, Middle East, Africa:
Bosch Security Systems B.V.
P.O. Box 80002
5617 BA Eindhoven, The Netherlands
Phone: + 31 40 2577 284
Fax: +31 40 2577 330
emea.securitysystems@bosch.com
www.boschsecurity.com

Asia-Pacific:
Robert Bosch (SEA) Pte Ltd, Security Systems
11 Bishan Street 21
Singapore 573943
Phone: +65 6571 2808
Fax: +65 6571 2699
apr.securitysystems@bosch.com
www.boschsecurity.asia

China:
Bosch (Shanghai) Security Systems Ltd.
203 Building, No. 333 Fuquan Road North IBP
Changning District, Shanghai
200335 China
Phone +86 21 22181111
Fax: +86 21 22182398
www.boschsecurity.com.cn

Latin America and Caribbean:
Robert Bosch Ltda Security Systems Division
Via Anhanguera, Km 98
CEP 13065-900
Campinas, Sao Paulo, Brazil
Phone: +55 19 2103 2860
Fax: +55 19 2103 2862
latam.boschsecurity@bosch.com
www.boschsecurity.com

© Bosch Security Systems 2016 | Data subject to change without notice
9437875723 | en, V10, 20. May 2016