THIS COPY IS PROVIDED ON A RESTRICTED BASIS AND IS NOT TO BE USED IN ANY WAY DETRIMENTAL TO THE INTERESTS OF PANDUIT CORP.

PANDUIT PART NO.	WEIGHT
FLEX-CM12C	1.55 lbs (0.70 kg)
FLEX-CM18C	

NOTES:
1. SEE CATALOG FOR COMPLETE LIST OF PARTS APPLICABLE FOR USE WITH THIS PART.
2. DIMENSIONS IN BRACKETS ARE METRIC.
3. MATERIAL: GALVANNEALED STEEL W/ PLASTIC CLIPS COLOR: BLACK
4. INCLUDES 4 TRANSITION BUNDLING CLIPS. (18 POSITION OR 12 POSITION CLIPS AVAILABLE)
5. TRANSITION PANEL ATTACHES TO PANDUIT PEV12 VERTICAL CABLE MANAGER.
6. ALL MATERIALS AND COMPONENTS USED MEET THE MATERIAL RESTRICTIONS OF RoHS (EUROPEAN DIRECTIVE 2011/65/EC ON THE RESTRICTION OF HAZARDOUS SUBSTANCES) AS PROPOSED BY THE RoHS TECHNICAL ADAPTATION COMMITEE.

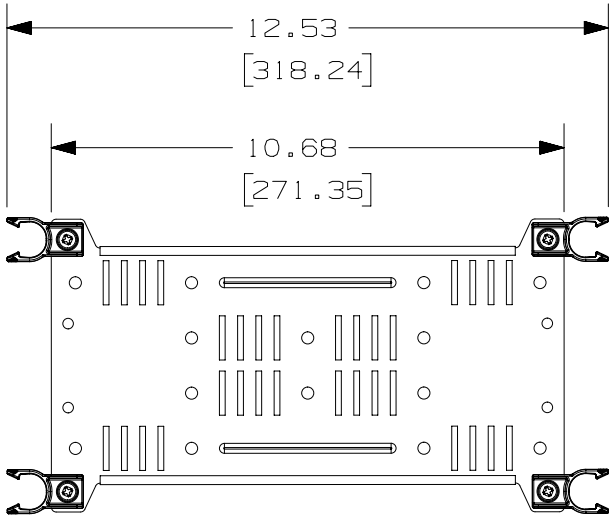

FRONT VIEW

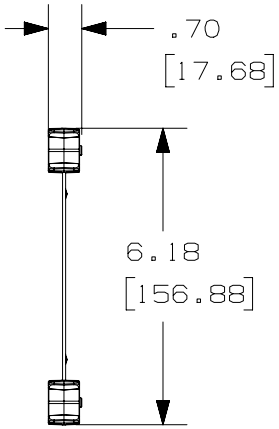

SIDE VIEW

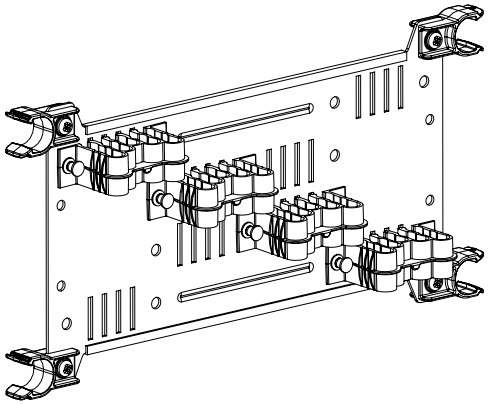

ISO VIEW
(12 POSITION BUNDLING CLIPS SHOWN)

REV	DATE	BY	CHK	APR	DESCRIPTION	ECN
00	01-13-15	SAT	BSN	TMK	RELEASED TO PRODUCTION	12F187JF-DC

TITLE
HD FLEX REAR CABLE MANAGER
CUSTOMER DRAWING

ITEM REVISION NAME: 12F187JF/00

DATASET FILE NAME: 12F187JF_DC/00A

UNLESS OTHERWISE SPECIFIED, DIMENSIONAL TOLERANCES ARE: IN [mm]
.X ± .XXX ± .010 [0.3]
.XX ± .03 [0.8] ANGLES ±
THIRD ANGLE PROJECTION

PART NO.: SEE TABLE

DRAWING NUMBER: 12F187JF-DC

DRAWN BY	DATE	CHK	SCALE	SHT 1 OF 1	SIZE
SAT	01-13-15	BSN	1:4		A