THIS COPY IS PROVIDED ON A RESTRICTED BASIS AND IS NOT TO BE USED IN ANY WAY DETRIMENTAL TO THE INTERESTS OF PANDUIT CORP.

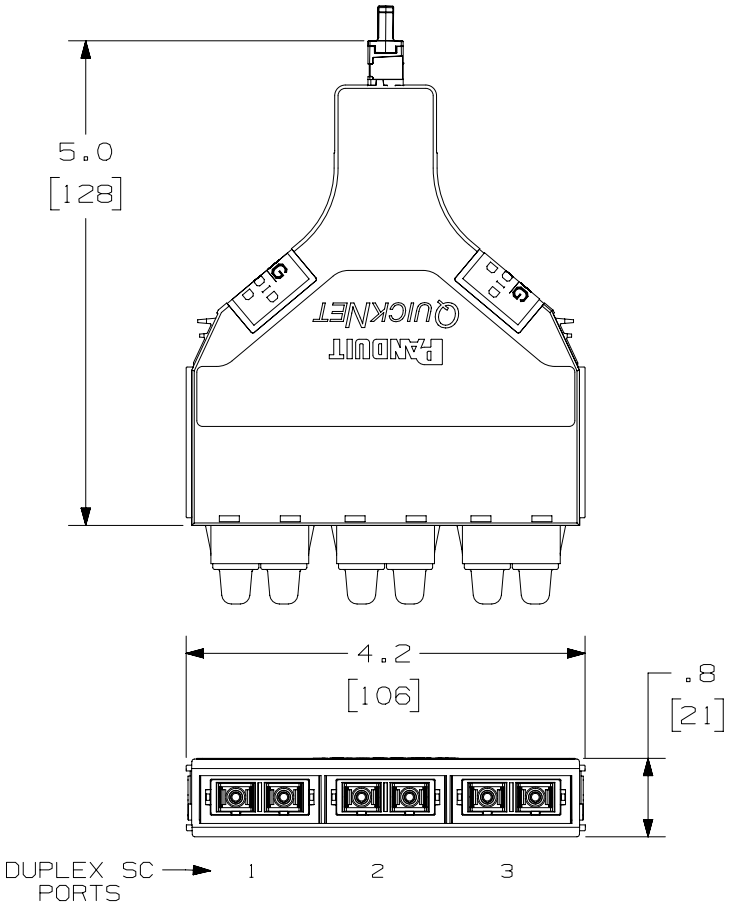

VIEW SHOWN WITHOUT DUSTCAPS

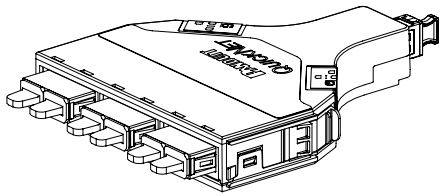

PANDUIT PART NUMBER	FIBER TYPE	PERFORMANCE LEVEL	ADAPTER COLOR (SPLIT SLEEVE)
FQ6N-06-03AS	OM1	STANDARD LOSS	ELECTRIC IVORY (PHOS BRONZE)
FQ5N-06-03AS	OM2	STANDARD LOSS	BLACK (PHOS BRONZE)
FQXN-06-03AS	OM3	STANDARD LOSS	AQUA (ZIRCONIA)
FQXO-06-03AS	OM3	OPTIMIZED LOSS	AQUA (ZIRCONIA)
FQZN-06-03AS	OM4	STANDARD LOSS	AQUA (ZIRCONIA)
FQZO-06-03AS	OM4	OPTIMIZED LOSS	AQUA (ZIRCONIA)
FQ9N-06-03AS	OS1/OS2	STANDARD LOSS	BLUE (ZIRCONIA)

NOTES:
1. SEE CURRENT CATALOG FOR PART NUMBER SUFFIXES TO INDICATE COLOR AND/OR PACKAGE QUANTITIES.
2. SEE CATALOG FOR A COMPLETE LIST OF PARTSAPPLICABLE FOR USE WITH THIS PRODUCT.
3. MATERIALS:
   a. MODULE MATERIAL: PLASTIC
   b. ADAPTER: COMPOSITE PLASTIC
4. CASSETTE MODULE WEIGHT: 2.4oz [69.0g]
5. DIMENSIONS IN BRACKETS ARE METRIC
6. METHOD A CASSETTES COMPLY WITH ANSI/TIA-568-C.0. SEE ANSI/TIA-568-C.0. FOR POLARITY DETAILS AND EXAMPLE OF A BASIC LINK.
7. ALL MATERIALS AND COMPONENTS USED MEET THE MATERIAL RESTRICTIONS OF RoHS, (EUROPEAN DIRECTIVE 2011/65/EC ON THE RESTRICTIONS OF HAZARDOUS SUBSTANCES) AS PROPOSED BY THE RoHS TECHNICAL ADAPTATION COMMITEE.

PART NUMBER: FQ**-06-3A3

TITLE: QUICKNET SFQ SERIES CASSETTE, 6 FIBER DUPLEX SC TO MPO CASSETTE METHOD A

CUSTOMER DRAWING

ITEM REVISION NAME: M02947ZA/02

DATASET FILE NAME: M02947ZA_DC/00C

UNLESS OTHERWISE SPECIFIED, DIMENSIONAL TOLERANCES ARE: IN [mm]

.X ± .XXX ± .010 [.3]

.XX ± .03[.8] ANGLES ±

THIRD ANGLE PROJECTION

MATERIAL:

DRAWING NUMBER: 02947-42

DRAWN BY	DATE	CHK	SCALE	SHT 1 OF 1	SIZE
EFK	08-05-09	JAWI	NONE		A

REV	DATE	BY	CHK	APR	DESCRIPTION	ECN
2	2/16/15	JSP	WJM	RAR	A. UPDATED DRAWING TITLE BLOCK.	02947-42

D10100DA/14