THIS COPY IS PROVIDED ON A RESTRICTED BASIS AND IS NOT TO BE USED IN ANY WAY DETRIMENTAL TO THE INTERESTS OF PANDUIT CORP.

PANDUIT TOOL NO.	INSTALLS * THE FOLLOWING CABLE TIE CROSS-SECTION **	WEIGHT/PC	
		OZ	GRAMS
GTH-E	S,HS,LH,H	11.9	337

(A)

NOTES, UNLESS OTHERWISE SPECIFIED:

RoHS COMPLIANT.

* THIS TOOL TIGHTENS CABLE TIES AND CUTS OFF EXCESS PORTION WHEN PRESET TENSION IS ATTAINED.

** CABLE TIE CROSS-SECTION CODE:
S = STANDARD
HS = HEAVY STANDARD (CONTOUR-TY)
LH = LIGHT HEAVY
H = HEAVY

DIMENSIONS IN BRACKETS ARE METRIC.

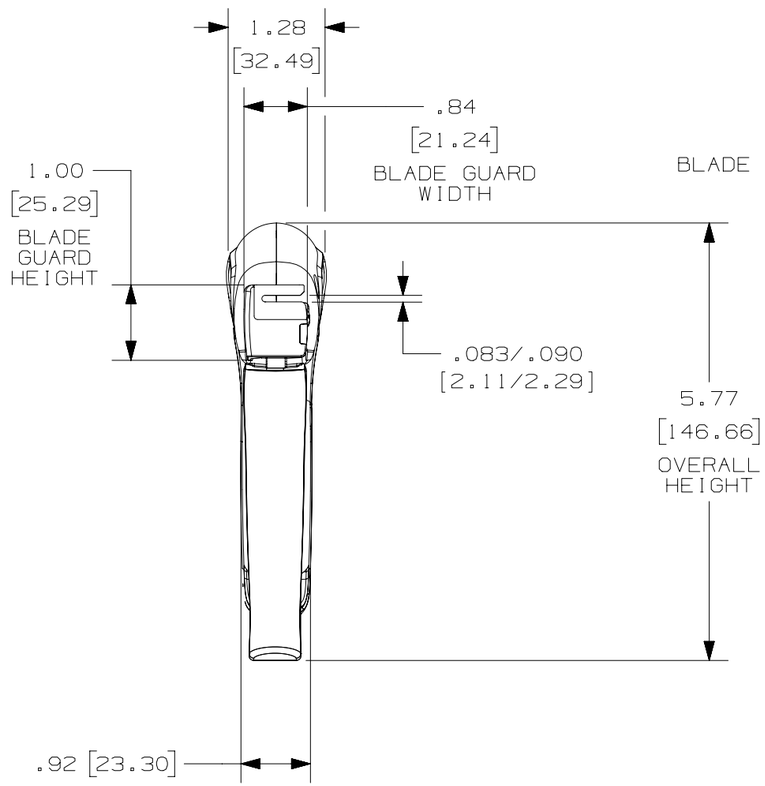

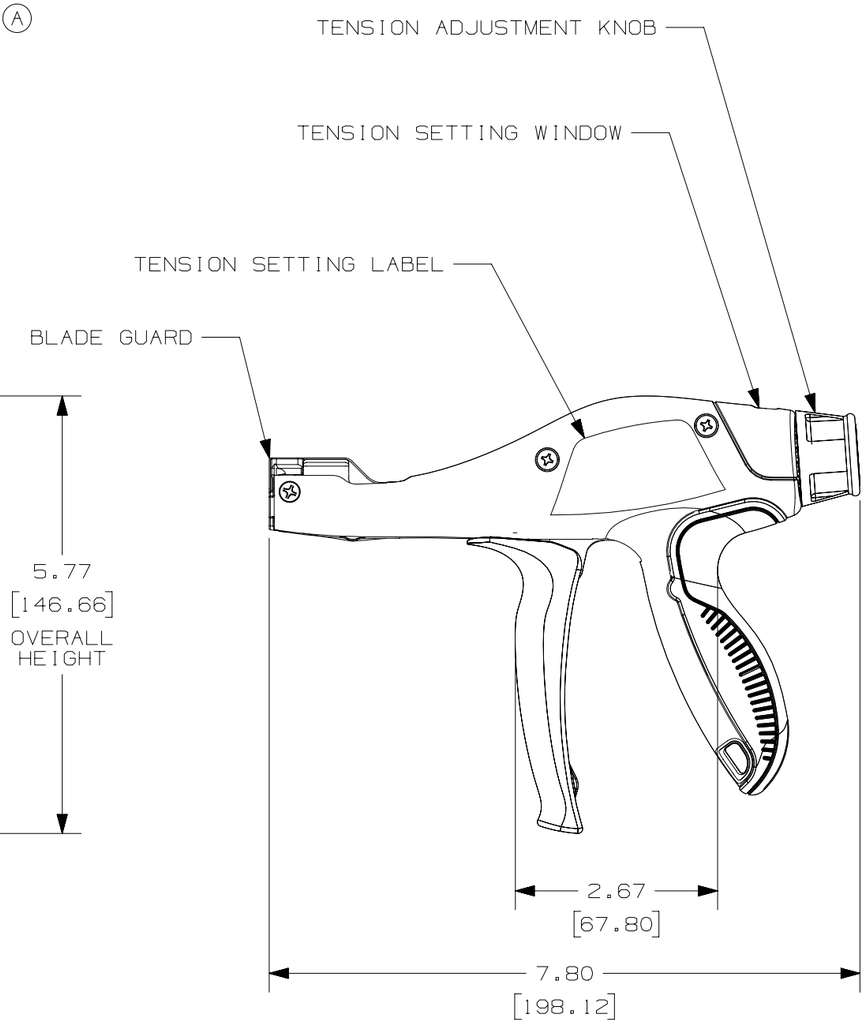

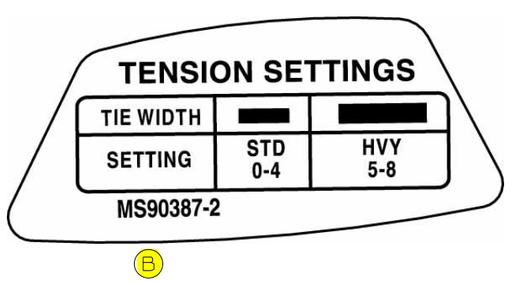

REV	DATE	BY	CHK	APR	DESCRIPTION	ECN
02	9-7-16	JEH	ABJ	JADE	ADDED: (B) MIL SPEC NUMBER TO THE LABEL	10636
01	10-29-15	JEH	ABJ	ABJ	WAS: (A) 11.72 oz, 333 GRAMS	4849

TITLE: CD, GTH-E

Customer/Military Drawing

ITEM REVISION NAME: R27577AA/02

DATASET FILE NAME: R27577AA_DS_WH27577B01/02A

UNLESS OTHERWISE SPECIFIED, DIMENSIONAL TOLERANCES ARE: IN [mm]
.X ± .1 [2.54] .XXX ± .005 [.127]
.XX ± .01 [.25] ANGLES ± 5 °
THIRD ANGLE PROJECTION

MATERIAL: -

DRAWING NUMBER: WH27577B01

DRAWN BY	DATE	CHK	SCALE	SIZE
JEH	1-26-15	ABJ	1:2	B

SHT 1 OF 1