THIS COPY IS PROVIDED ON A RESTRICTED BASIS AND IS NOT TO BE USED IN ANY WAY DETRIMENTAL TO THE INTERESTS OF PANDUIT CORP.

PANDUIT P/N	WEIGHT
CHS2R2**-X	.16 LB/10 PCS. (74 G/10 PCS)

NOTES:
1. SEE CURRENT CATALOG FOR ADDITIONAL PART NUMBER SUFFIXES TO INDICATE COLOR AND OR PACKAGE QUANTITY.
2. SEE CATALOG FOR COMPLETE LIST OF PARTS APPLICABLE FOR USE WITH THIS PART.
3. DIMENSIONS IN [ ] ARE IN METRIC.

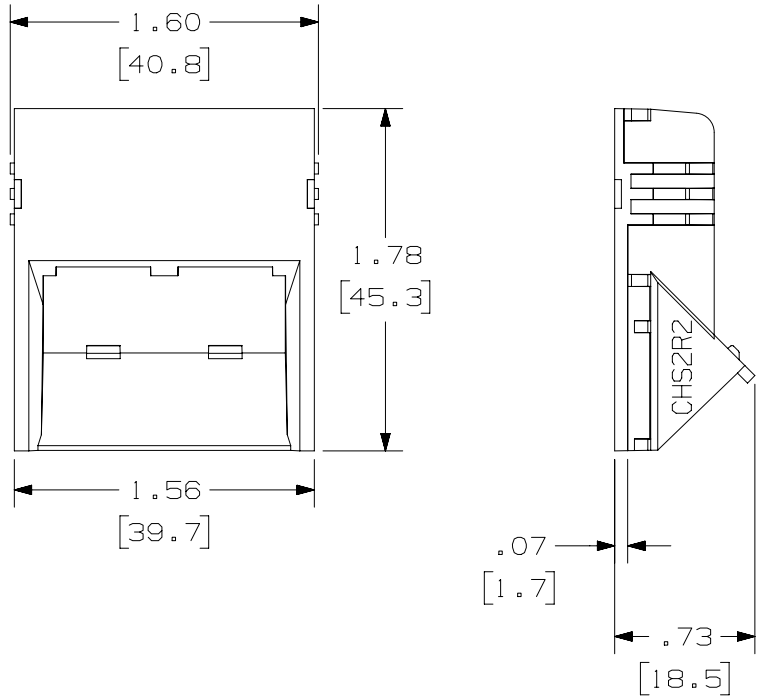

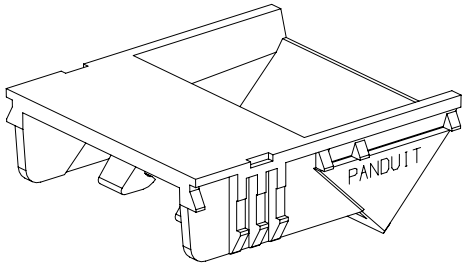

PART NUMBER: CHS2R2**-X

TITLE: MINI-COM 2 POSITION SLOPED RECCESSED 2/3 SIZE INSERT

CUSTOMER DRAWING

ITEM REVISION NAME: D35544CA/00

DATASET FILE NAME: D35544CA_DC_02B

UNLESS OTHERWISE SPECIFIED, DIMENSIONAL TOLERANCES ARE: IN [mm]

.X ± .XXX ± .010 [.3]

.XX ± .03[.8] ANGLES ±

THIRD ANGLE PROJECTION

MATERIAL: ABS

DRAWING NUMBER: 35544-25

DRAWN BY	DATE	CHK	SCALE	SHT 1 OF 1	SIZE
JBA	12-23-96	CEF	NONE		A

REV	DATE	BY	CHK	APR	DESCRIPTION	ECN
3	4/23/14	JSP	REFR	MMR	REVISED AND REDRAWN, PREVIOUS REVISIONS HAVE BEEN OMITTED.	35544-25

D10100DA/14