THIS COPY IS PROVIDED ON A RESTRICTED BASIS AND IS NOT TO BE USED IN ANY WAY DETRIMENTAL TO THE INTERESTS OF PANDUIT CORP.

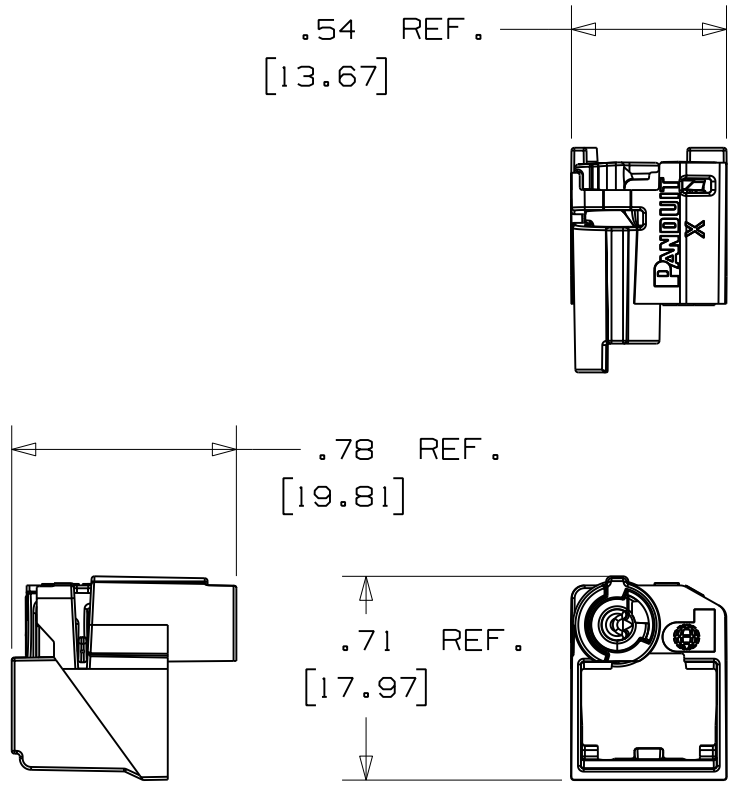

PSL-DCPLRX

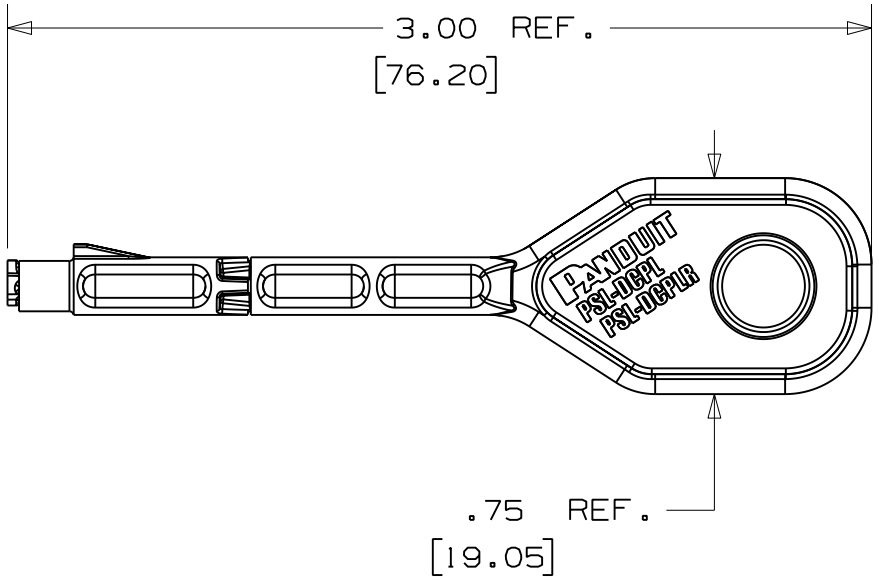

KEY

REV	DATE	BY	CHK	DESCRIPTION	ECN - R	CUST	SUP
0	07/29/10	MROB		DRAWING RELEASED	6097 R		

CAD FILENAME/LAYERS: 100186AB_DC_C10842/05A

PANDUIT CORP. TINLEY PARK, ILLINOIS

PSL-DCPLRX-**
CUSTOMER DRAWING

UNLESS OTHERWISE SPECIFIED, DIMENSIONAL TOLERANCES ARE:
(.X) ± .05 (.XXX) ± .01
(.XX) ± .02 ANGLES ± 2°

UNLESS OTHERWISE SPECIFIED, ALL DIMENSIONS ARE GIVEN IN INCHES, THIRD ANGLE PROJECTION.

DRAWN BY: MROB
DATE: 07/29/10
CHK'D:
MAT'L; N/A
SCALE: 1.5:1
DRAWING NO.: C10842
DWG: A
SIZE