Model 1040-CCOAP

Cloud or Canopy Ceiling WAP Installation Kit-Cisco

Category: Suspended Ceiling Mounts

Model 1040 is an economical, easy-to-install cloud or canopy mounting kit for WAPs from most vendors. A cutout is made in the ceiling panel, the panel bridge is placed above the ceiling panel, and the white trim is placed around the WAP. The WAP is attached to a universal mounting T-bar and pressed into the panel bridge. The WAP is now recessed into the ceiling much like a recessed light fixture for unobstructed wireless coverage. WAP trim can be swapped out for alternate WAP brands.

Patent pending

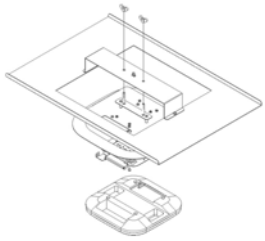

Features & Benefits

- Conveniently and quickly install wireless access points in cloud or canopy ceiling panels
- Access point mounts flush to the ceiling, providing an aesthetic, professionally installed appearance
- 20 ga. galvanized steel panel bridge and adjustable hanger wire prevent ceiling panel sag or cracking

Technical Specifications

- Design: Recessed installation kit for installing wireless access points in cloud, canopy, or suspended ceiling panels. Comprised of steel ceiling panel bridge, adjustable hanger wire, access point bracket, and trim for Cisco access points.
- Performance: UL Listed for low-voltage applications and designed to meet NEC300-22 and 300-23 for plenum installations,
- Access point trim is interchangeable for other access points
- Construction: 20 ga. galvanized steel panel bridge; white, powder-coated steel trim.
- Use hanger wire to attach to building structure
- Size: 16 inches by 23.75 inches by 3 inches (406 mm by 603 mm by 76mm)

Standards for Safety

- UL 2416, Audio/Video, Information and Communication Technology Equipment Cabinet, Enclosure & Rack Systems
- CSA C22.2 NO. 60950-1-07 + Amd. 1 Amd. 2 Information Technology Equipment -- Safety. Part 1, General Requirements

Configurations

AP-specific trim is included with the product; please specify the trim required.

Note: The trim is interchangeable after installation. Please contact your Oberon representative for additional trim options.

Model Number	Description	Retrofit trim P/N
1040-AP205	Small trim for Aruba Networks AP205	37-4X-AP205
1040-AP215	Small trim for Aruba Networks AP215	37-4X-AP215
1040-AP225	Small trim for Aruba Networks AP225	37-4X-AP225
1040-AP325	Small trim for Aruba Networks AP325	37-4X-AP325
1040-CCOAP	Small trim for Cisco Enterprise APs	37-4X-CCOAP

Measurements *(Maximum values):*

- Height: 18 in.
- Width: 23.75 in.
- Depth: 3 in.
- Item Weight: 4 lbs.
- Shipping Weight: N/A

Includes

- (1) 18” x 23.75” galvanized steel ceiling panel bridge
- (1) AP-specific, white powder-coated trim (see Configurations)
- (1) T-bar bracket
- Adjustable hanger wire
- Installation instructions

Documentation Links

Spec Sheet - oberoninc.com/index.php?option=com_content&view=article&id=2157&Itemid=399

Installation Instructions - oberoninc.com/images/WebDocs/Model1040-CCOAP_Installation_Instructions.pdf

Customer Prints - oberoninc.com/images/WebDocs/Model1040_XX_CustomerPrint.pdf

SECTION 27_21_33 DATA COMMUNICATIONS WIRELESS ACCESS POINTS - http://oberoninc.com/images/WebDocs/SECTION 27_21_33 DATA COMMUNICATIONS WIRELESS ACCESS POINTS.pdf

Images and documents may depict similar models in the product series.

Dimensional Images

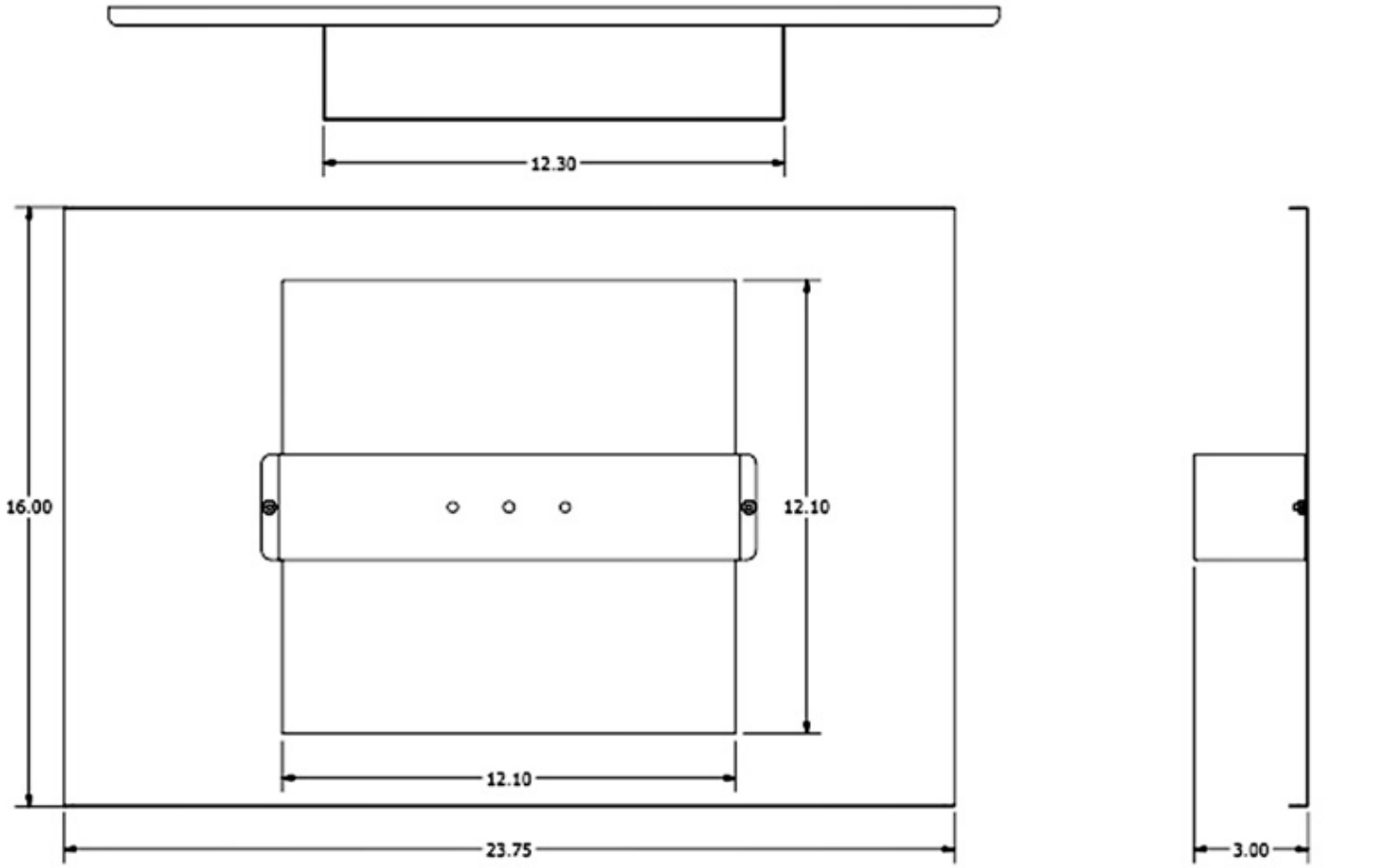

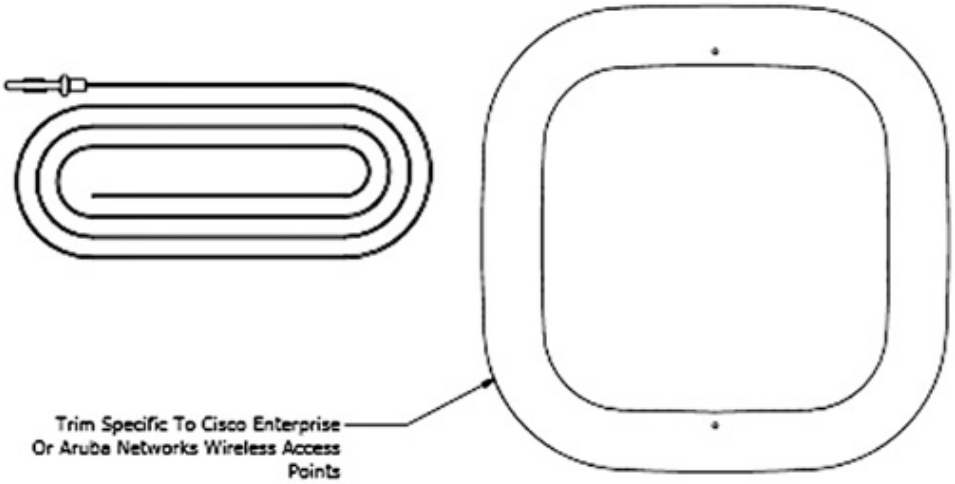

NOTE: All materials used in the construction of Oberon products must be RoHS compliant. Contact Oberon engineering if RoHS compliant materials are not available.