THIS COPY IS PROVIDED ON A RESTRICTED BASIS AND IS NOT TO BE USED IN ANY WAY DETRIMENTAL TO THE INTERESTS OF PANDUIT CORP.

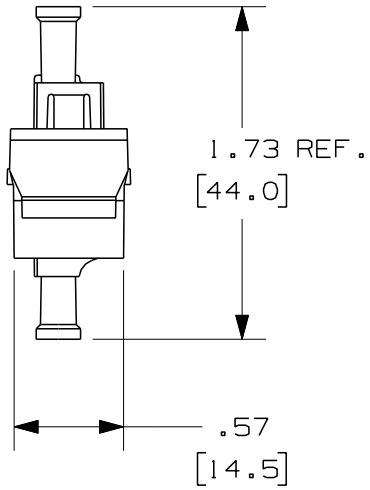

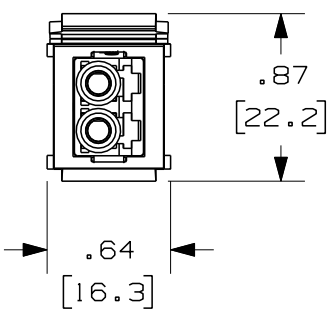

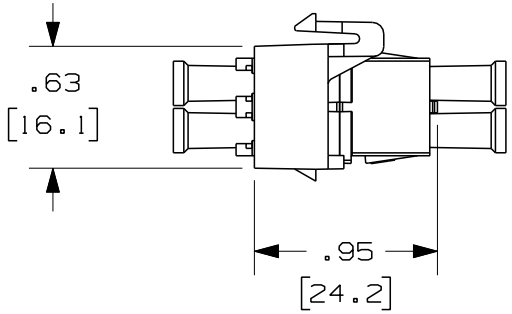

PANDUIT P/N	WEIGHT	SPLIT SLEEVE TYPE
NKDLCM**	.09 lbs/10 pcs [39.4 g/10 pcs]	PHOSPHOR BRONZE
NKDLCMZ**	.09 lbs/10 pcs [39.4 g/10 pcs]	ZIRCONIA

NOTES:
1. SEE CURRENT CATALOG FOR PART NUMBER SUFFIXES TO INDICATE COLOR OF MODULE BASE, AND/OR PACKAGE QUANTITIES.
2. SEE CATALOG FOR COMPLETE LIST OF PARTS APPLICABLE FOR USE WITH THIS PART.
3. MATERIALS:
   a. MODULE BASE: ABS
   b. ADAPTER HOUSING: POLYCARBONATE
   c. SPLIT SLEEVE: PHOSPHOR BRONZE/ZIRCONIA
   d. INNER LATCH: POLYETHERIMIDE
   e. DUST CAP: THERMOPLASTIC ELASTOMER
4. COMPLIANT WITH TIA/EIA-604-10 (FOCIS-10) AND TIA/EIA-568-B.3
5. DIMENSIONS IN BRACKETS ARE METRIC [mm]

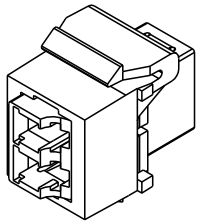

ISOMETRIC VIEW
SHOWN W/O DUST CAPS

REV	DATE	BY	CHK	DESCRIPTION	ECN - R	CUST	SUP	OTH
R	10-14-04	MC		RELEASED TO PRODUCTION	02066-06			

NETKEY FIBER OPTIC
DUPLEX LC ADAPTER MODULE
CUSTOMER DRAWING

PANDUIT™ CORP.
TINLEY PARK, ILL 60477

THIRD ANGLE PROJECTION

ALL DIMENSIONS ARE GIVEN IN INCHES, UNLESS OTHERWISE SPECIFIED.
DIMENSIONAL TOLERANCES ARE:
(.X) (.XXX)±.010 [0.3]
(.XX)±.03 [0.8] ANGLES

DRAWN BY: MC
DATE: 09-20-04
CHK'D:
REVIEW DRAWING NUMBERS: SEE NOTES

DRAWING FILENAME: M02066AB_DC_00A.prt
SCALE: NONE
PART NO.: NKDLCM**/NKDLCMZ**
DRAWING NO.: 02066-06
SIZE: A