THIS COPY IS PROVIDED ON A RESTRICTED BASIS AND IS NOT TO BE USED IN ANY WAY DETRIMENTAL TO THE INTERESTS OF PANDUIT CORP.

PANDUIT P/N	DESCRIPTION	COLOR	WEIGHT
CUVWA06S06STB1	NET-CONTAIN UAC VERTICAL WALL ADAPTER 600mm WIDE	BLACK	0.44 Kg/EACH [0.9 LBS/EACH]
CUVWA06S06STW1	NET-CONTAIN UAC VERTICAL WALL ADAPTER 600mm WIDE	WHITE	0.44 Kg/EACH [0.9 LBS/EACH]
CUVWA07S07STB1	NET-CONTAIN UAC VERTICAL WALL ADAPTER 700mm WIDE	BLACK	0.47 Kg/EACH [1.0 LBS/EACH]
CUVWA07S07STW1	NET-CONTAIN UAC VERTICAL WALL ADAPTER 700mm WIDE	WHITE	0.47 Kg/EACH [1.0 LBS/EACH]
CUVWA08S08STB1	NET-CONTAIN UAC VERTICAL WALL ADAPTER 800mm WIDE	BLACK	0.50 Kg/EACH [1.1 LBS/EACH]
CUVWA08S08STW1	NET-CONTAIN UAC VERTICAL WALL ADAPTER 800mm WIDE	WHITE	0.50 Kg/EACH [1.1 LBS/EACH]

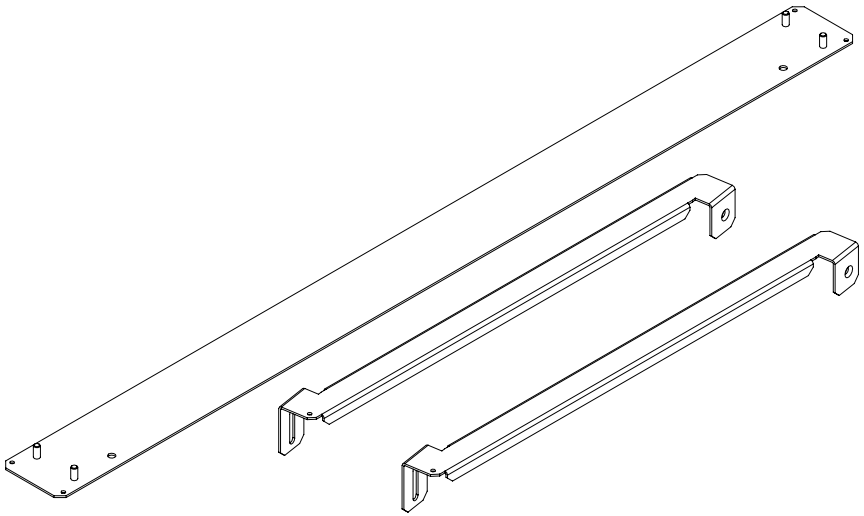

1. VISIT OUR ON-LINE CATALOG AT WWW.PANDUIT.COM FOR A LIST OF CURRENT PARTS APPLICABLE FOR USE WITH THIS PRODUCT.
2. PARTS SUPPLIED:
   1- VERTICAL WALL ADAPTER
   2- WALL BRACE BRACKET
   1- HARDWARE KIT
   1- INSTRUCTION SHEET
3. PRIMARY DIMENSIONS ARE IN MILLIMETERS.

REV	DATE	BY	CHK	APR	DESCRIPTION	ECN
00A	5-29-14	PBS	PATR	SGI	RELEASED TO PRODUCTION	12V359SS-DC

TITLE

(CUVWA**S**ST**) NET-CONTAIN UAC VERTICAL WALL ADAPTER

CUSTOMER DRAWING

ITEM REVISION NAME: 12V359SS/00

DATASET FILE NAME: 12V359SS_DC/00A

PANDUIT

MATERIAL: N/A

THIRD ANGLE PROJECTION

DRAWING NUMBER: 12V359SS-DC

DRAWN BY	DATE	CHK	SCALE	SHT 1 OF 1	SIZE
PBS	5-29-14	PATR	NONE		A

D10100DA/16