THIS COPY IS PROVIDED ON A RESTRICTED BASIS AND IS NOT TO BE USED IN ANY WAY DETRIMENTAL TO THE INTERESTS OF PANDUIT CORP.

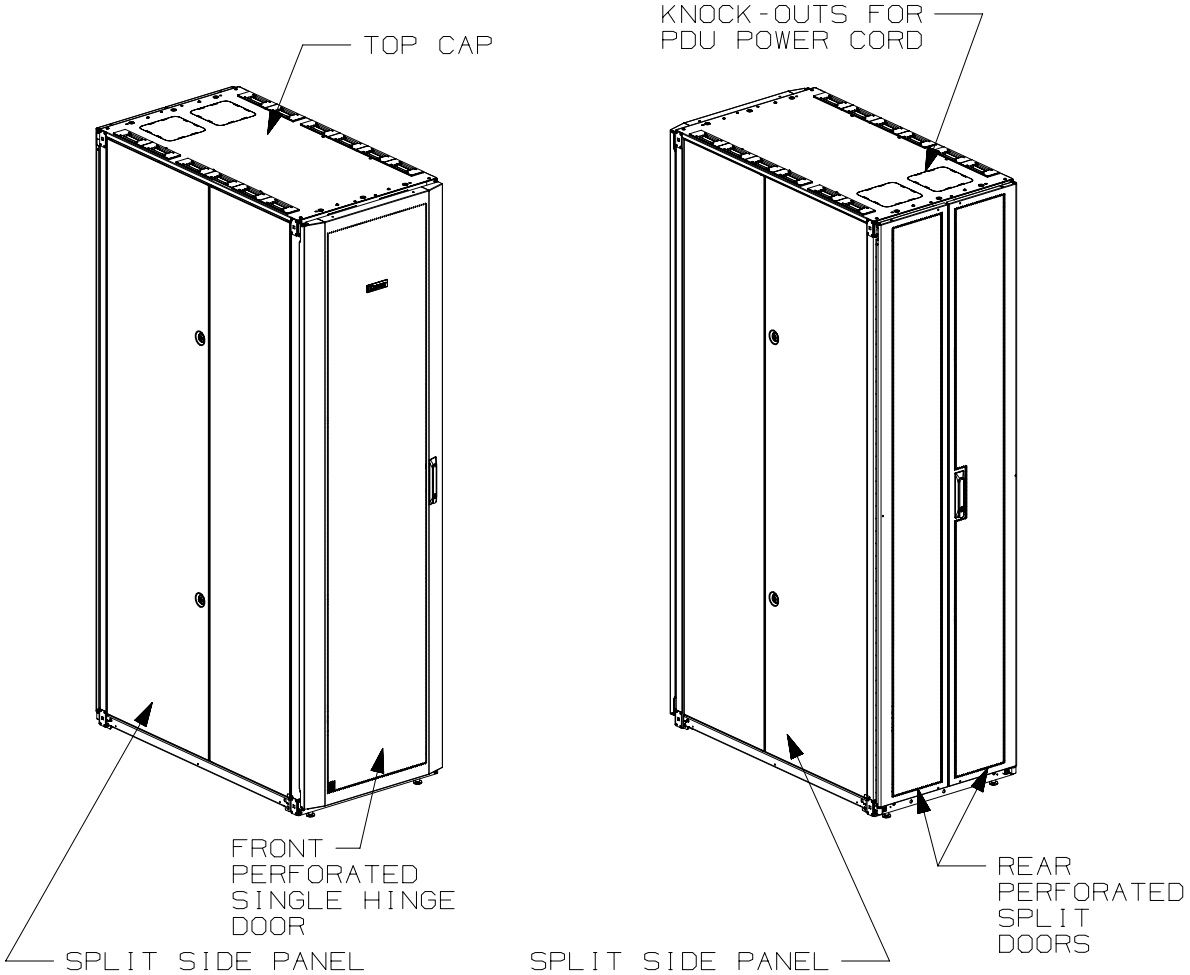

1. VISIT OUR ON-LINE CATALOG AT WWW.PANDUIT.COM FOR A LIST OF CURRENT PARTS APPLICABLE FOR USE WITH THIS PRODUCT.
2. PRIMARY DIMENSIONS ARE IN MILLIMETERS.
3. RAIL ADJUSTMENT MEASUREMENTS ARE TAKEN FROM THE FRONT FACE OF EACH EQUIPMENT RAIL. INDEPENDENT ADJUSTABLE REAR EQUIPMENT MOUNTING RAILS (EIA) ADJUST FROM 65mm [2.6in] TO 357mm [14.1in] AND FROM 521mm [20.5in] TO 765mm [30.1in] WITH PDU BRACKETS AND CABLE MANAGEMENT FINGERS IN PLACE. REMOVING PDU BRACKETS AND OPTIONAL FINGERS INCREASES MAXIMUM E-RAIL SPAN TO 911mm [35.9in].
4. CAN BE USED WITH ANY 19" EIA STANDARD COMPONENT IN ADDITION TO ALL PANDUIT HORIZONTAL CABLE MANAGEMENT AND PATCH PANEL PRODUCTS.
5. EIA UNIVERSAL STANDARD HOLE PROGRESSION ON EQUIPMENT RAILS 15.88mm [.625in], 15.88mm [.625in], 12.70mm [.50in], 15.88mm [.625in], 15.88mm [.625in], 12.7mm [.50in]...ETC.
6. PARTS SUPPLIED:
   - BASE CABINET
   - FRONT PERFORATED SINGLE HINGE DOOR (SEE CHART ON SHEET 2)
   - REAR PERFORATED SPLIT DOOR (SEE CHART ON SHEET 2)
   - EQUIPMENT RAILS FRONT & REAR (SEE CHART ON SHEET 2)
   - PDU BRACKETS (SEE CHART ON SHEET 2)
   - INSTRUCTION SHEET
7. RACK UNIT SPACING NUMERALS ARE CLEARLY PRINTED ON EQUIPMENT MOUNTING RAILS.
8. FULLY BONDED STRUCTURE WHEN ASSEMBLED PER INSTRUCTIONS.
9. STATIC LOAD RATING. 1360 Kg(3000 LBS)
10. ROLLING LOAD RATING. 1133 Kg (2500 LBS)
11. SINGLE POINT GROUND LOCATIONS AT TOP AND BOTTOM OF CABINET.
12. ALL CABINET RAILS ARE INSTALLED NUMBERS UP.
13. MAXIMUM EQUIPMENT DEPTH, 959mm [37.75in].

REV	DATE	BY	CHK	APR	DESCRIPTION	ECN
01A	9-25-14	PBS	ADP	TCN	FLOOR MOUNT DIMENSIONS UPDATED	V09000BX
00A	5-28-13	PBS	NAGL	JDWE	RELEASED TO PRODUCTION	12V352BK-DC

TITLE

NET-ACCESS S TYPE CABINET W/O CASTERS
600mm WIDE X 1070mm DEEP FAMILY

CUSTOMER DRAWING

ITEM REVISION NAME: 12V352BK/01.PRT

DATASET FILE NAME: 12V352BK_DC/01A.PRT

PANDUIT

MATERIAL: N/A

THIRD ANGLE PROJECTION

DRAWING NUMBER: 12V352BK-DC

DRAWN BY	DATE	CHK	SCALE		SIZE
PBS	5-28-13	NAGL	NONE	SHT 1 OF 5	A

THIS COPY IS PROVIDED ON A RESTRICTED BASIS AND IS NOT TO BE USED IN ANY WAY DETRIMENTAL TO THE INTERESTS OF PANDUIT CORP.

PART NO.	DESCRIPTION	SINGLE HINGE FRONT DOOR	SPLIT REAR DOOR	SPLIT SIDE PANEL	FRONT CAGE NUT E-RAIL	REAR CAGE NUT FINGER MGMT E-RAIL	REAR CAGE NUT VERTICAL PATCH E-RAIL	STANDARD PDU BRACKETS	CASTERS	CABLE MGMT FINGERS	CABINET WEIGHT FULLY UNPACKAGED	CABINET WEIGHT SHIPPING WEIGHT
S6212*9	NET-ACCESS S-TYPE CABINET 600mm X 42RU X 1070mm DEEP	01	01	02	02	02	00	02	00	00	112 Kg/EACH 247 LBS/EACH	132 Kg/EACH 292 LBS/EACH
S6512*9	NET-ACCESS S-TYPE CABINET 600mm X 45RU X 1070mm DEEP	01	01	02	02	02	00	02	00	00	116 Kg/EACH 257 LBS/EACH	137 Kg/EACH 302 LBS/EACH
S6812*9	NET-ACCESS S-TYPE CABINET 600mm X 48RU X 1070mm DEEP	01	01	02	02	02	00	02	00	00	121 Kg/EACH 267 LBS/EACH	141 Kg/EACH 312 LBS/EACH
S6219*9	NET-ACCESS S-TYPE CABINET 600mm X 42RU X 1070mm DEEP	01	01	00	02	02	00	02	00	00	79 Kg/EACH 174 LBS/EACH	99 Kg/EACH 219 LBS/EACH
S6519*9	NET-ACCESS S-TYPE CABINET 600mm X 45RU X 1070mm DEEP	01	01	00	02	02	00	02	00	00	81 Kg/EACH 179 LBS/EACH	102 Kg/EACH 224 LBS/EACH
S6819*9	NET-ACCESS S-TYPE CABINET 600mm X 48RU X 1070mm DEEP	01	01	00	02	02	00	02	00	00	83 Kg/EACH 184 LBS/EACH	104 Kg/EACH 229 LBS/EACH

* DENOTES COLOR
"B" = BLACK
"W" = WHITE

REV	DATE	BY	CHK	APR	DESCRIPTION	ECN
01A	9-25-14	PBS	ADP	TCN	SEE SHEET 1 OF 5 FOR REVISIONS	V09000BX
00A	5-28-13	PBS	NAGL	JDWE	SEE SHEET 1 OF 5 FOR REVISIONS	12V352BK-DC

TITLE
NET-ACCESS S TYPE CABINET W/O CASTERS
600mm WIDE X 1070mm DEEP FAMILY

CUSTOMER DRAWING

ITEM REVISION NAME: 12V352BK/01.PRT

DATASET FILE NAME: 12V352BK_DC/01A.PRT

PANDUIT

MATERIAL: N/A

THIRD ANGLE PROJECTION

DRAWING NUMBER: 12V352BK-DC

DRAWN BY	DATE	CHK	SCALE		SIZE
PBS	5-28-13	NAGL	NONE	SHT 2 OF 5	A

THIS COPY IS PROVIDED ON A RESTRICTED BASIS AND IS NOT TO BE USED IN ANY WAY DETRIMENTAL TO THE INTERESTS OF PANDUIT CORP.

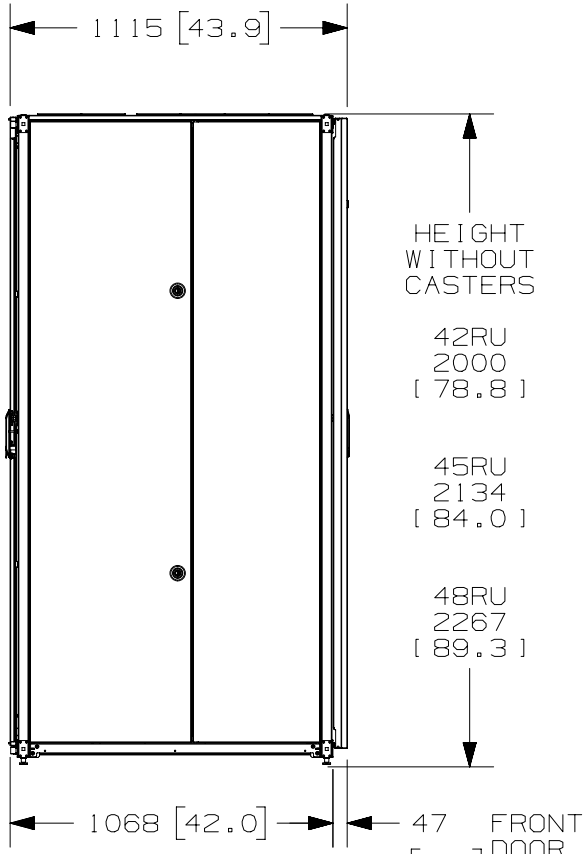

LEFT VIEW

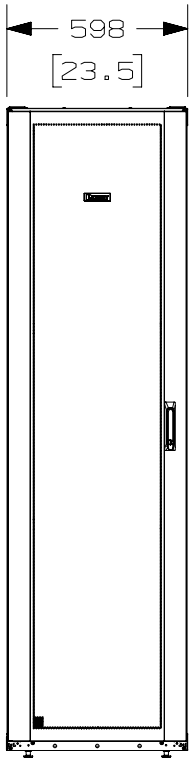

FRONT VIEW

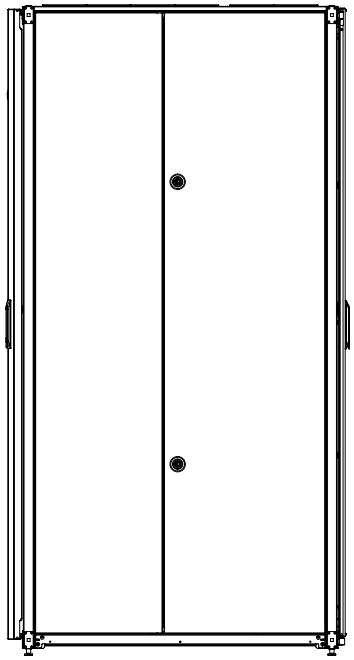

RIGHT VIEW

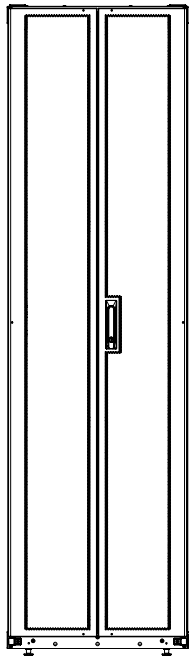

REAR VIEW

REV	DATE	BY	CHK	APR	DESCRIPTION	ECN
01A	9-25-14	PBS	ADP	TCN	SEE SHEET 1 OF 5 FOR REVISIONS	V09000BX
00A	5-28-13	PBS	NAGL	JDWE	SEE SHEET 1 OF 5 FOR REVISIONS	12V352BK-DC

TITLE

NET-ACCESS S TYPE CABINET W/O CASTERS
600mm WIDE X 1070mm DEEP FAMILY

CUSTOMER DRAWING

ITEM REVISION NAME: 12V352BK/01.PRT

DATASET FILE NAME: 12V352BK_DC/01A.PRT

PANDUIT

MATERIAL: N/A

THIRD ANGLE PROJECTION

DRAWING NUMBER: 12V352BK-DC

DRAWN BY	DATE	CHK	SCALE		SIZE
PBS	5-28-13	NAGL	NONE	SHT 3 OF 5	A

THIS COPY IS PROVIDED ON A RESTRICTED BASIS AND IS NOT TO BE USED IN ANY WAY DETRIMENTAL TO THE INTERESTS OF PANDUIT CORP.

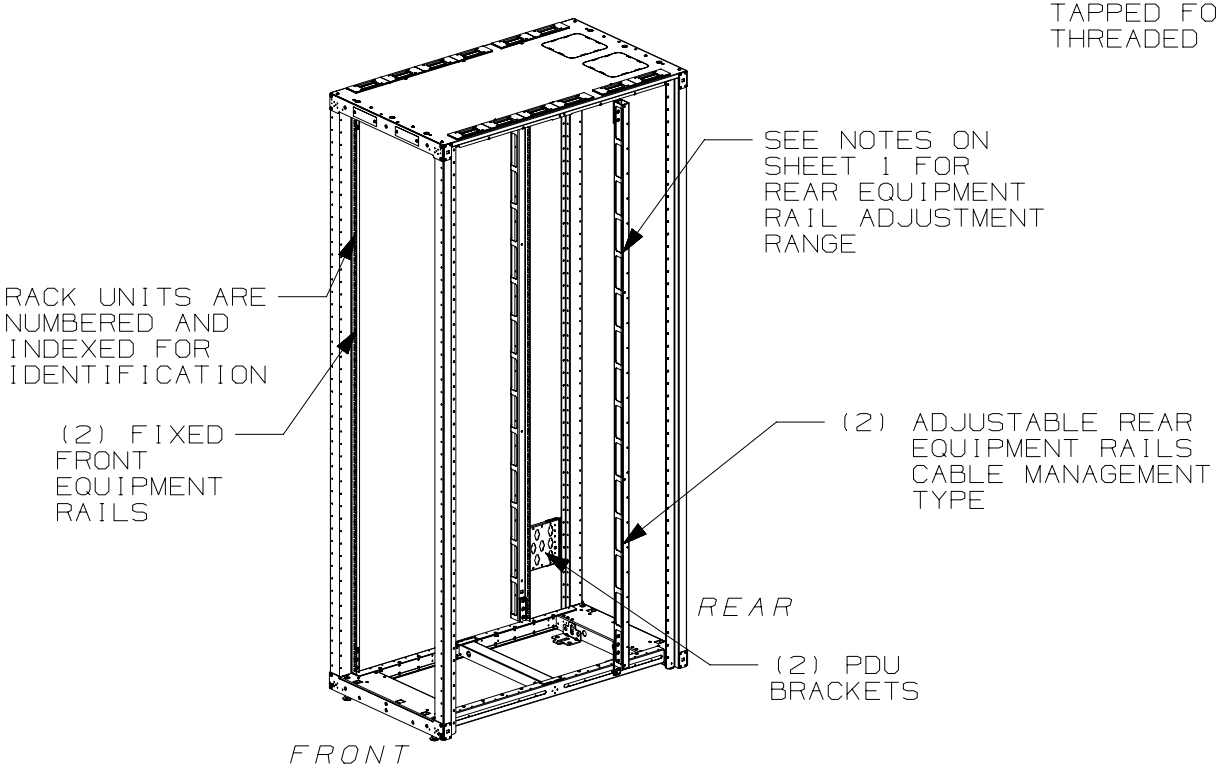

FRONT DOOR, REAR DOOR, AND SIDE PANELS NOT SHOWN

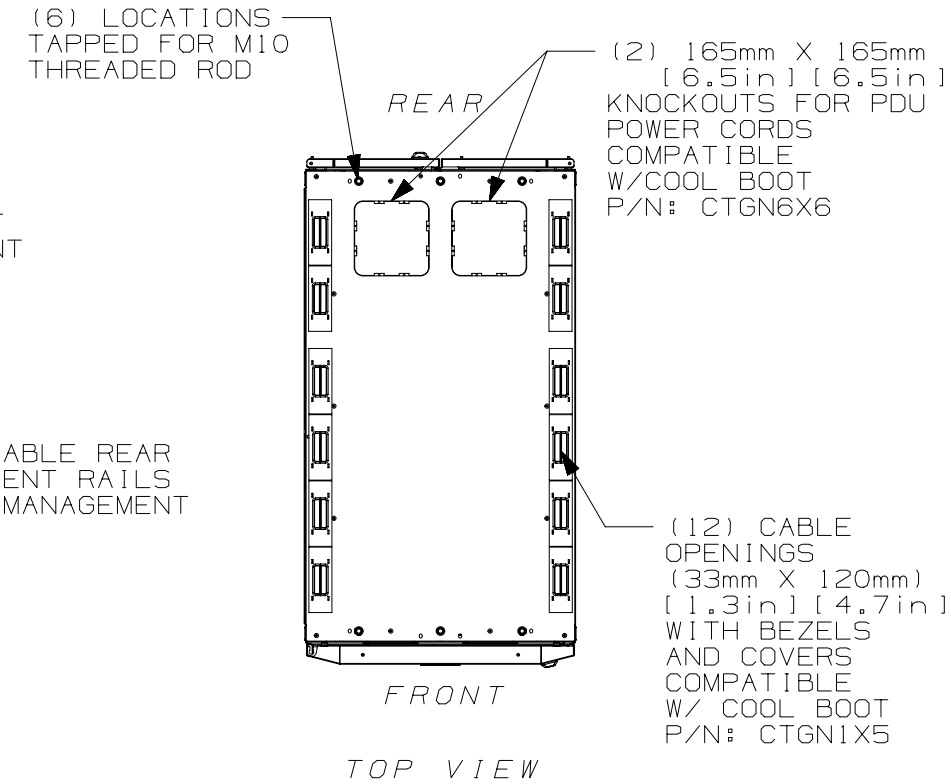

TOP VIEW

REV	DATE	BY	CHK	APR	DESCRIPTION	ECN
01A	9-25-14	PBS	ADP	TCN	SEE SHEET 1 OF 5 FOR REVISIONS	V09000BX
00A	5-28-13	PBS	NAGL	JDWE	SEE SHEET 1 OF 5 FOR REVISIONS	12V352BK-DC

TITLE

NET-ACCESS S TYPE CABINET W/O CASTERS
600mm WIDE X 1070mm DEEP FAMILY

CUSTOMER DRAWING

ITEM REVISION NAME: 12V352BK/01.PRT

DATASET FILE NAME: 12V352BK_DC/01A.PRT

PANDUIT

MATERIAL: N/A

THIRD ANGLE PROJECTION

DRAWING NUMBER: 12V352BK-DC

DRAWN BY	DATE	CHK	SCALE		SIZE
PBS	5-28-13	NAGL	NONE	SHT 4 OF 5	A

THIS COPY IS PROVIDED ON A RESTRICTED BASIS AND IS NOT TO BE USED IN ANY WAY DETRIMENTAL TO THE INTERESTS OF PANDUIT CORP.

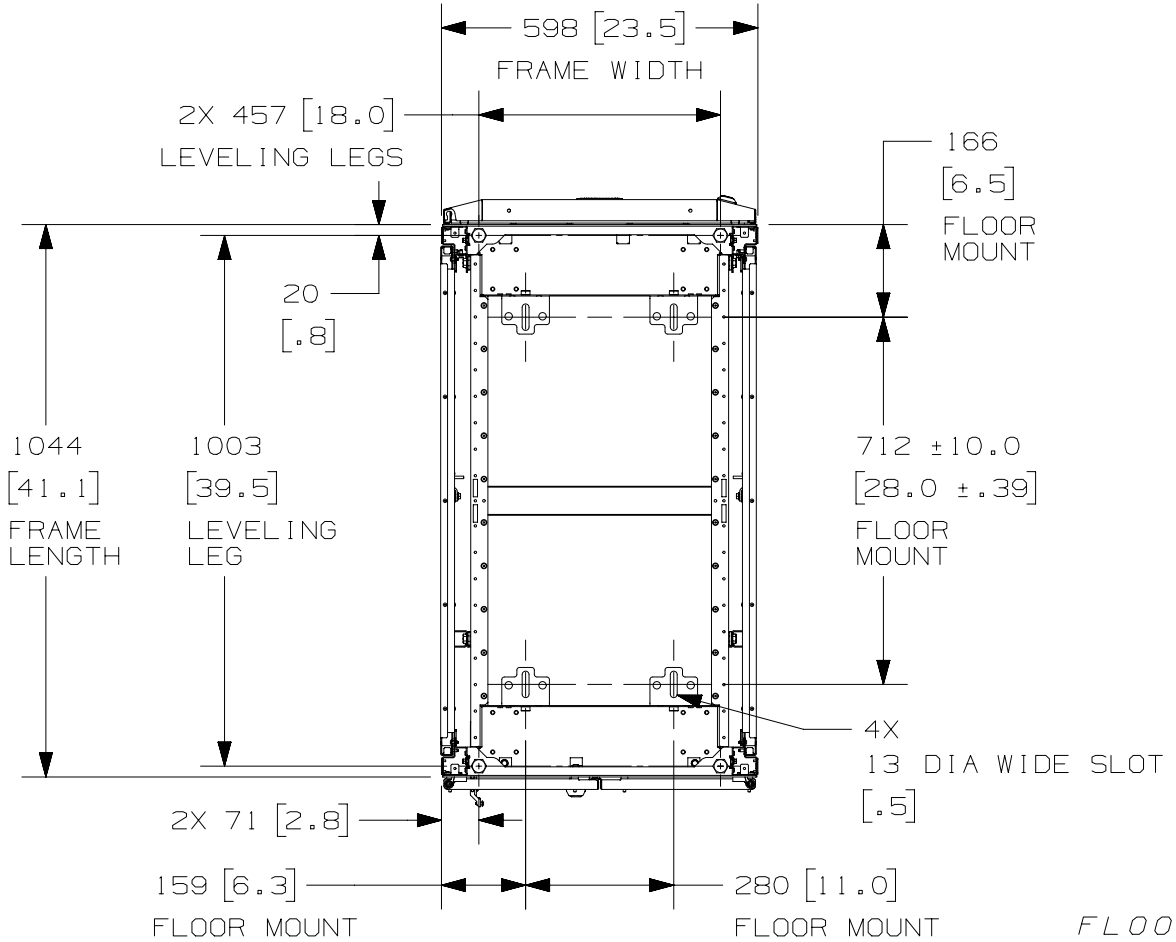

REAR OF CABINET BOTTOM VIEW

FLOOR MOUNTING HOLE LOCATIONS- SOME PARTS REMOVED FOR CLARITY

REV	DATE	BY	CHK	APR	DESCRIPTION	ECN
01A	9-25-14	PBS	ADP	TCN	SEE SHEET 1 OF 5 FOR REVISIONS	V09000BX
00A	5-29-13	PBS	NAGL	JDWE	SEE SHEET 1 OF 5 FOR REVISIONS	12V352BK-DC

TITLE

NET-ACCESS S TYPE CABINET W/O CASTERS
600mm WIDE X 1070mm DEEP FAMILY

CUSTOMER DRAWING

ITEM REVISION NAME: 12V352BK/01.PRT

DATASET FILE NAME: 12V352BK_DC/01A.PRT

PANDUIT

MATERIAL: N/A

THIRD ANGLE PROJECTION

DRAWING NUMBER: 12V352BK-DC

DRAWN BY	DATE	CHK	SCALE		SIZE
PBS	5-28-13	NAGL	NONE	SHT 5 OF 5	A