THIS COPY IS PROVIDED ON A RESTRICTED BASIS AND IS NOT TO BE USED IN ANY WAY DETRIMENTAL TO THE INTERESTS OF PANDUIT CORP.

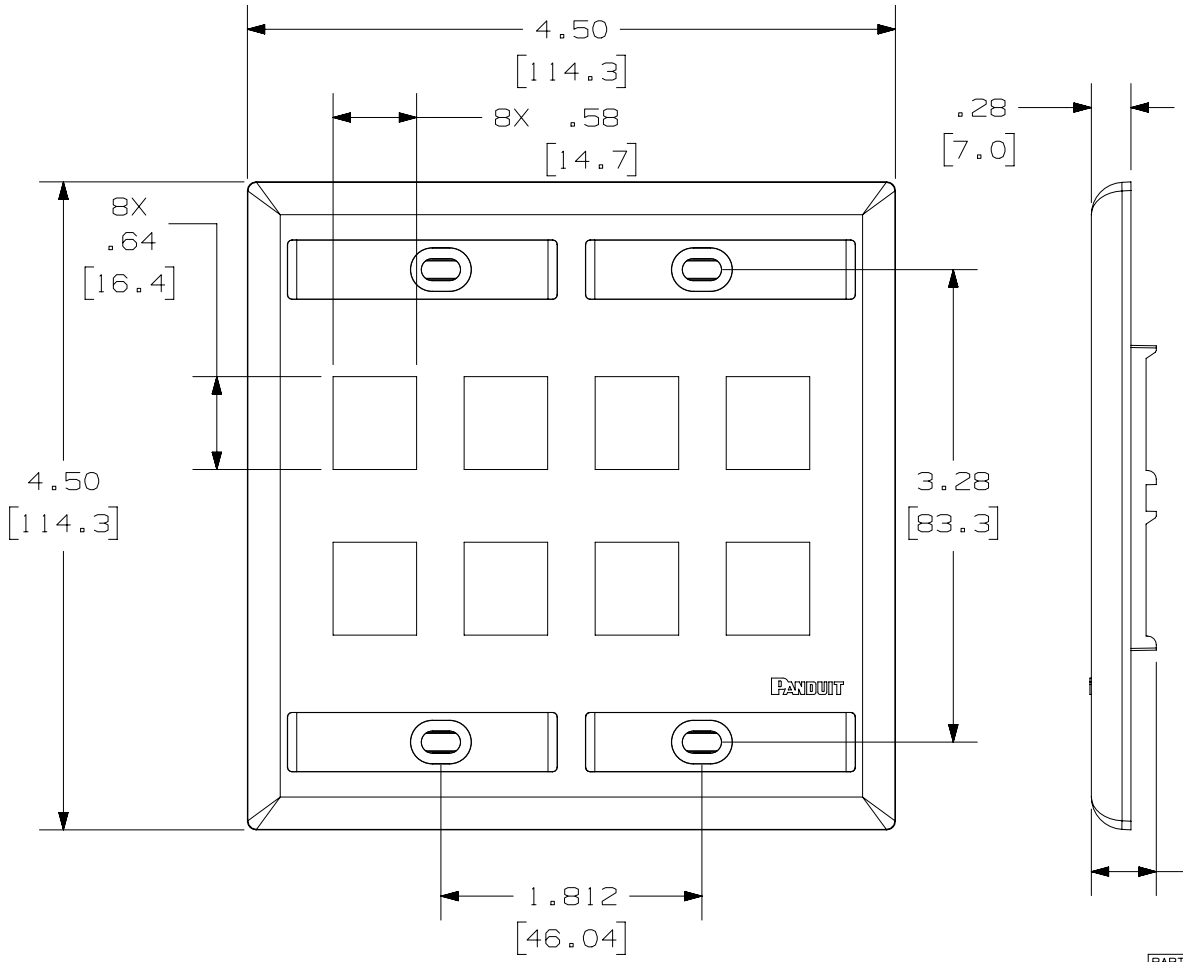

PANDUIT P/N	WEIGHT
NK8F**	.96 LB/10 PCS (436.6 g/10 PCS)

NOTES:
1. SEE CURRENT CATALOG FOR ADDITIONAL PART NUMBER SUFFIXES TO INDICATE COLOR AND OR PACKAGE QUANTITY.
2. SEE CATALOG FOR COMPLETE LIST OF PARTS APPLICABLE FOR USE WITH THIS PART.
3. DIMENSIONS IN PARENTHESES ARE IN METRIC.
4. PART INCLUDES:
   1- FACEPLATE
   4- LABEL
   4- LABEL COVER
   4- MOUNTING SCREW (#6-32X 1.00")

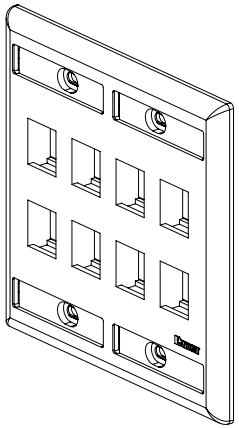

REV	DATE	BY	CHK	APR	DESCRIPTION	ECN
1	5-16-14	MDJR	REFR	JCK	A. UPDATED TITLE BLOCK.	02799-02
R	7-2-07	JSP	EB	EB	RELEASED TO PRODUCTION	02799-02

PART NUMBER: NK8F**

TITLE: NETKEY 8 POSITION DOUBLE GANG FACEPLATE WITH LABELS

CUSTOMER DRAWING

ITEM REVISION NAME: M02799BA/00

DATASET FILE NAME: M02799BA_DC02/00B

UNLESS OTHERWISE SPECIFIED, DIMENSIONAL TOLERANCES ARE: IN [mm]

.X ± .XXX ± .010 [.3]

.XX ± .03 [.8] ANGLES ±

THIRD ANGLE PROJECTION

MATERIAL: ABS

DRAWING NUMBER: 02799-02

DRAWN BY	DATE	CHK	SCALE	SHT 1 OF 1	SIZE
JSP	7-2-07	EB	NONE		A

D10100DA/14