THIS COPY IS PROVIDED ON A RESTRICTED BASIS AND IS NOT TO BE USED IN ANY WAY DETRIMENTAL TO THE INTERESTS OF PANDUIT CORP.

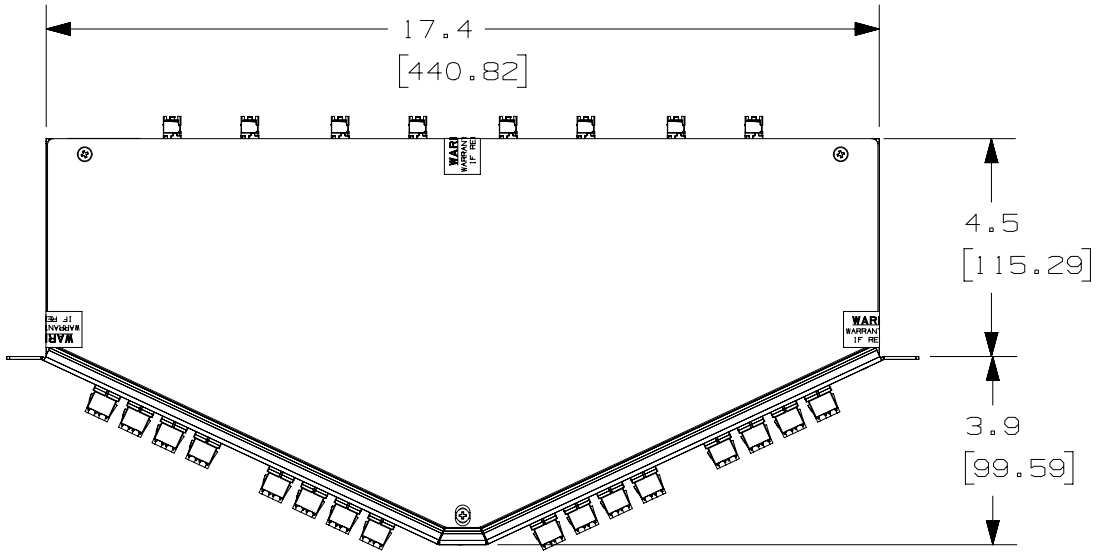

NOTES:
1. SEE CURRENT CATALOG FOR PART NUMBER SUFFIXES TO INDICATE COLOR AND/OR PACKAGE QUANTITIES.
2. SEE CATALOG FOR A COMPLETE LIST OF PARTS APPLICABLE FOR USE WITH THIS PRODUCT.
3. REFERENCE TIA-568-C.0. FOR DETAILS ON METHOD A CONNECTIVITY.
4. MATERIALS:
   A. FRONT PANEL: STEEL
   B. BOX AND LID: ALUMINUM
   C. ADAPTERS: COMPOSITE PLASTIC
5. CASSETTE WEIGHT: 39.0oz [1100.0g]
6. DIMENSIONS IN BRACKETS ARE METRIC
7. ALL MATERIALS AND COMPONENTS USED MEET THE MATERIAL RESTRICTIONS OF RoHS, (EUROPEAN DIRECTIVE 2011/65/EC ON THE RESTRICTIONS OF HAZARDOUS SUBSTANCES) AS PROPOSED BY THE RoHS TECHNICAL ADAPTATION COMMITEE.

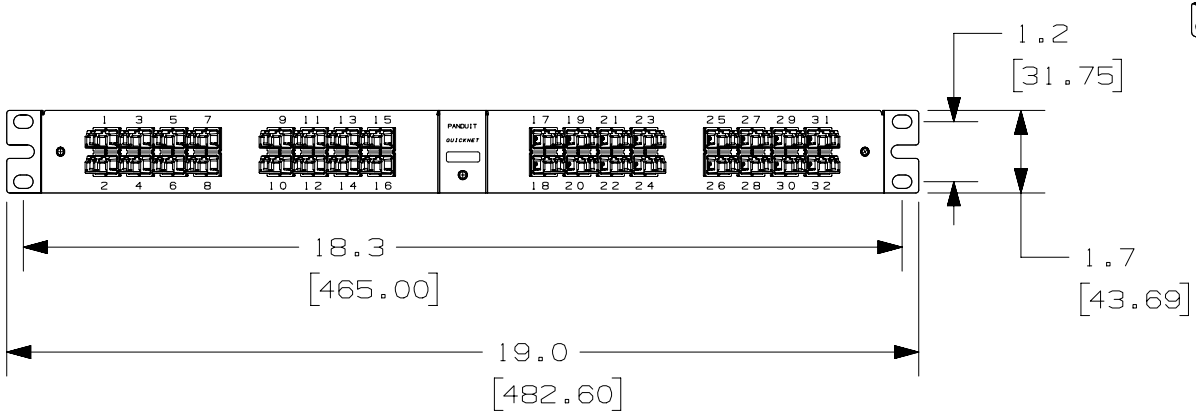

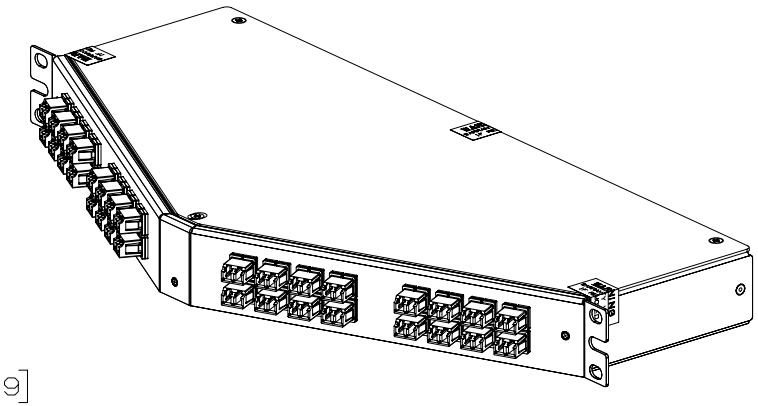

ISOMETRIC VIEW

REV	DATE	BY	CHK	APR	DESCRIPTION	ECN
01	09-24-13	SAT	YMG		RELEASED TO PRODUCTION	12F193AF-DC

TITLE
HDQ SERIES FIBER OPTIC ANGLED CASSETTES FOR CISCO 32 PORTS (64 FIBERS)

CUSTOMER DRAWING

ITEM REVISION NAME: 12F193AF/00

DATASET FILE NAME: 12F193AF_DC/00B

UNLESS OTHERWISE SPECIFIED, DIMENSIONAL TOLERANCES ARE: IN [mm]
.X ± .XXX ± .010 [0.3]
.XX ± .03 [0.8] ANGLES ±

THIRD ANGLE PROJECTION

MATERIAL: SEE NOTES

DRAWING NUMBER: 12F193AF-DC

DRAWN BY	DATE	CHK	SCALE	SHT 1 OF 3	SIZE
SAT	05-15-13	YMG	NONE		A

THIS COPY IS PROVIDED ON A RESTRICTED BASIS AND IS NOT TO BE USED IN ANY WAY DETRIMENTAL TO THE INTERESTS OF PANDUIT CORP.

TABLE 1 - HDQ SERIES FIBER OPTIC CASSETTE - MPO TO LC 10 GbE 1RU ANGLED PROFILE; 64-FIBER CISCO LABELING	
PART NUMBER	DESCRIPTION
METHOD A	
F1ACXN-6408-10S	OM3 FIBER; 8-FIBER MPO TO DUPLEX LC
F1ACXO-6408-10S	OPTIMIZED OM3 FIBER; 8-FIBER MPO TO DUPLEX LC
F1ACZN-6408-10S	OM4 FIBER; 8-FIBER MPO TO DUPLEX LC
F1ACZO-6408-10S	OPTIMIZED OM4 FIBER; 8-FIBER MPO TO DUPLEX LC
MODIFIED METHOD A, PAIR FLIPPED	
F1ACXN-6408-10F	OM3 FIBER; 8-FIBER MPO TO DUPLEX LC
F1ACXO-6408-10F	OPTIMIZED OM3 FIBER; 8-FIBER MPO TO DUPLEX LC
F1ACZN-6408-10F	OM4 FIBER; 8-FIBER MPO TO DUPLEX LC
F1ACZO-6408-10F	OPTIMIZED OM4 FIBER; 8-FIBER MPO TO DUPLEX LC

REV	DATE	BY	CHK	APR	DESCRIPTION	ECN
01	09-24-13	SAT	YMG		RELEASED TO PRODUCTION	12F193AF-DC

TITLE
HDQ SERIES FIBER OPTIC ANGLED CASSETTES FOR CISCO 32 PORTS (64 FIBERS)

CUSTOMER DRAWING

ITEM REVISION NAME: 12F193AF/00

DATASET FILE NAME: 12F193AF_DC/00B

UNLESS OTHERWISE SPECIFIED, DIMENSIONAL TOLERANCES ARE: IN [mm]
.X ± .XXX ± .010 [0.3]
.XX ± .03 [0.8] ANGLES ±

THIRD ANGLE PROJECTION

MATERIAL: SEE NOTES SHEET 1

DRAWING NUMBER: 12F193AF-DC

DRAWN BY	DATE	CHK	SCALE		SIZE
SAT	05-15-13	YMG	NONE	SHT 2 OF 3	A

THIS COPY IS PROVIDED ON A RESTRICTED BASIS AND IS NOT TO BE USED IN ANY WAY DETRIMENTAL TO THE INTERESTS OF PANDUIT CORP.

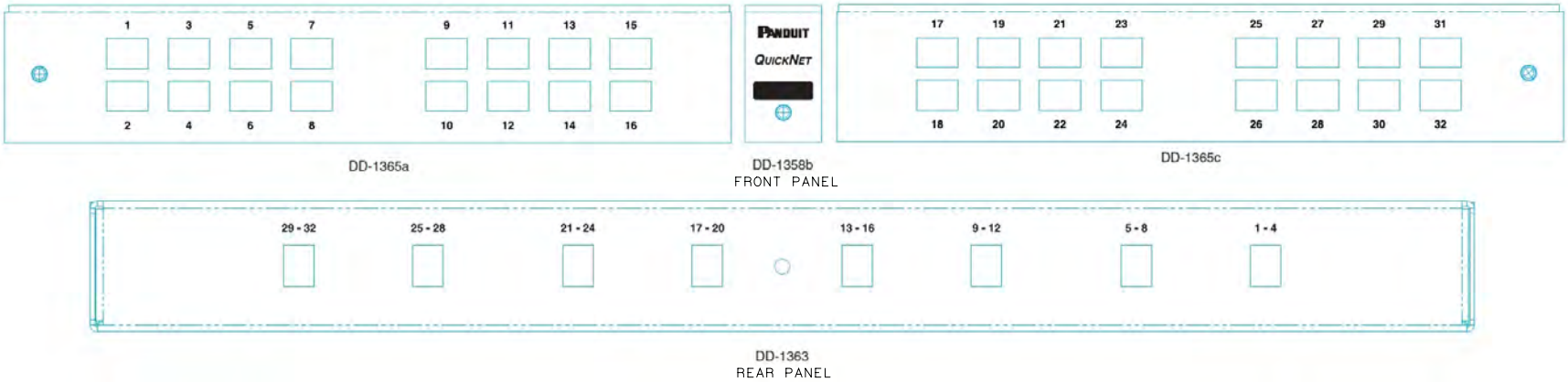

REV	DATE	BY	CHK	APR	DESCRIPTION	ECN
01	09-24-13	SAT	YMG		RELEASED TO PRODUCTION	12F193AF-DC

TITLE

HDQ SERIES FIBER OPTIC ANGLED CASSETTES FOR CISCO 32 PORTS (64 FIBERS)

CUSTOMER DRAWING

ITEM REVISION NAME: 12F193AF/00

DATASET FILE NAME: 12F193AF_DC/00B

UNLESS OTHERWISE SPECIFIED, DIMENSIONAL TOLERANCES ARE: IN [mm]

.X ± .XXX ± .010 [0.3]

.XX ± .03 [0.8] ANGLES ±

THIRD ANGLE PROJECTION

MATERIAL: SEE NOTES SHEET 1

DRAWING NUMBER: 12F193AF-DC

DRAWN BY	DATE	CHK	SCALE		SIZE
SAT	05-15-13	YMG	NONE	SHT 3 OF 3	A