THIS COPY IS PROVIDED ON A RESTRICTED BASIS AND IS NOT TO BE USED IN ANY WAY DETRIMENTAL TO THE INTERESTS OF PANDUIT CORP.

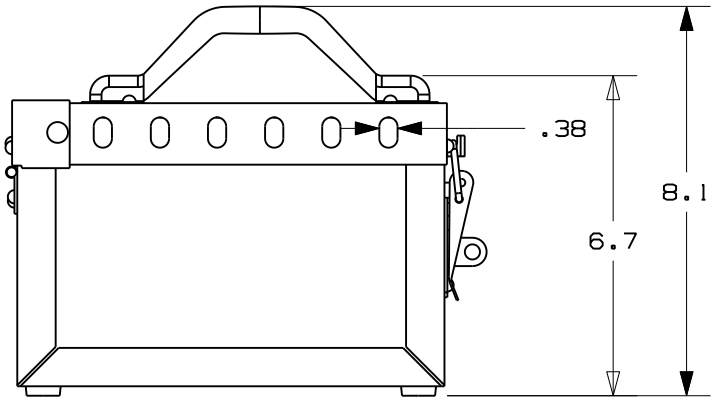

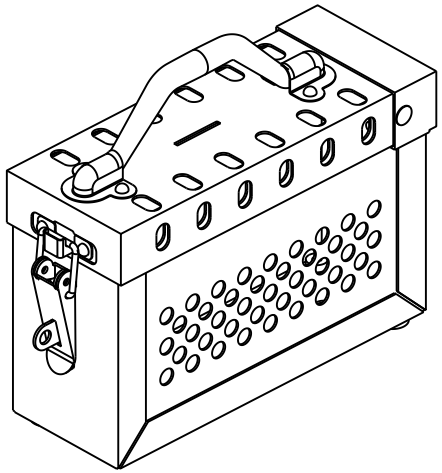

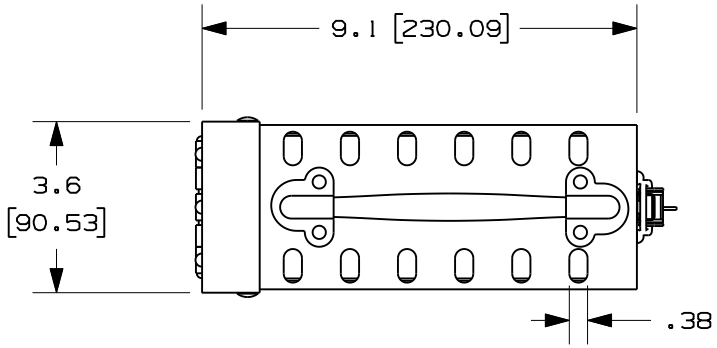

NOTES:

1) DIMENSIONS IN [ ] ARE MILLIMETERS

2) ACCOMODATES UP TO 13 PADLOCKS

3) INDUSTRIAL POWDER COATED STEEL CONSTRUTION

4) COLOR: RED

REV	DATE	BY	CHK	DESCRIPTION	ECN	-	R	CUST	SUP
0	10-2-09	JHAC		DRAWING RELEASE	5866		R		

CAD FILENAME/LAYERS: 100930AC_DC_C10795/06A

PANDUIT CORP. TINLEY PARK, ILLINOIS

PSL-GLBN CUSTOMER DRAWING SLIDING LID GROUP LOCK BOX

UNLESS OTHERWISE SPECIFIED, DIMENSIONAL TOLERANCES ARE:
(.X) ± .1 [0.76] (.XXX) ± .025 [0.13]
(.XX) ± .050 [0.25] ANGLES ± 5°

UNLESS OTHERWISE SPECIFIED, ALL DIMENSIONS ARE GIVEN IN INCHES, THIRD ANGLE PROJECTION.

DRAWN BY: JHAC
DATE: 10-2-09
CHK'D:

MAT'L: POWDER COATED STEEL

SCALE: 1:4

DRAWING NO.: C10795

DWG SIZE: A