1 THIS COPY IS PROVIDED ON A RESTRICTED BASIS AND IS NOT TO BE USED IN ANY WAY DETRIMENTAL TO THE INTERESTS OF PANDUIT CORP.

| PART NUMBER | STYLE | "A" | "B" +/-.15 | "C" MAX. | "D" +/-.15 | LEGEND | MARKER PER CARDS | STD. PKG. QTY. |
|---|---|---|---|---|---|---|---|---|
| PCV-120RY | R | 0.75 [19.1] | 8.00 [203.2] | .63 [16.0] | 8.00 [203.2] | 120 Volts | 1 | 5 |
| PCV-480RY | R | 0.75 [19.1] | 8.00 [203.2] | .63 [16.0] | 8.00 [203.2] | 480 Volts | 1 | 5 |
| PCV-FORY | R | 0.75 [19.1] | 8.00 [203.2] | .63 [16.0] | 8.00 [203.2] | Fiber Optic | 1 | 5 |
| PCV-FOMY | M | 1.50 [38.1] | 14.00 [355.6] | 2.00 [50.8] | 23.00 [584.2] | Fiber Optic | 1 | 5 |

NOTES:
1. MILLIMETER ARE IN [ ].
2. COLORS ARE SAFETY ORANGE FOR BACKGROUND AND SAFETY BLACK FOR THE LETTERING. 1

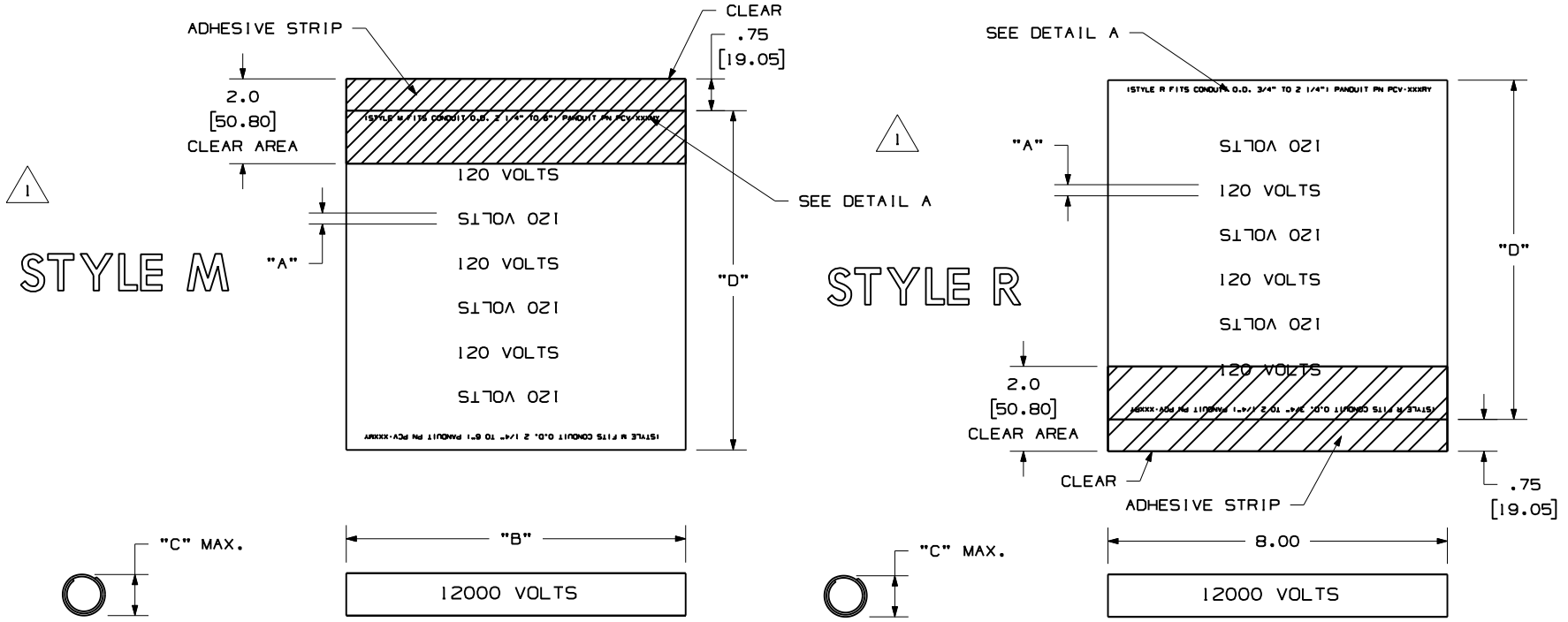


DETAIL "A"

(STYLE M FITS CONDUIT O.D. 2 1/4" TO 6") PANDUIT PN PCV-XXXMY
(STYLE R FITS CONDUIT O.D. 3/4" TO 2 1/4") PANDUIT PN PCV-XXXRY

| REV | DATE | BY | CHK | DESCRIPTION | ECN - R | CUST | SUP |
|---|---|---|---|---|---|---|---|
| 1 | 3/26/10 | RVU | | COMBINE FROM C10719 TO C10718. OBSOLETE C10719. | 5996 R | | |
| 0 | 7/14/08 | RVU | | DRAWING RELEASE. | 5480 R | | |

CAD FILENAME/LAYERS: 10028IIV-DC-C10718/04B

PANDUIT CORP. TINLEY PARK, ILLINOIS

CUSTOMER DRAWING
PCV PIPE MARKER
PCV-***MY & PCV-***RY 1

UNLESS OTHERWISE SPECIFIED, DIMENSIONAL TOLERANCES ARE:
(.X) ± .12 (.XXX) ± .025
(.XX) ± .062 ANGLES ± 5°

UNLESS OTHERWISE SPECIFIED, ALL DIMENSIONS ARE GIVEN IN INCHES, THIRD ANGLE PROJECTION.

DRAWN BY: RVU
DATE: 7/14/08
CHK'D:
MAT'L: GMV4
SCALE: NTS
DRAWING NO.: C10718
DWG: A
SIZE