Maximum load rating: 200 lbs

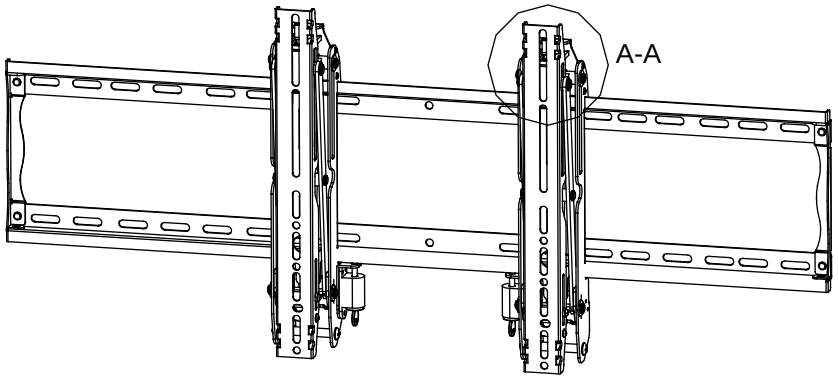

A --- A

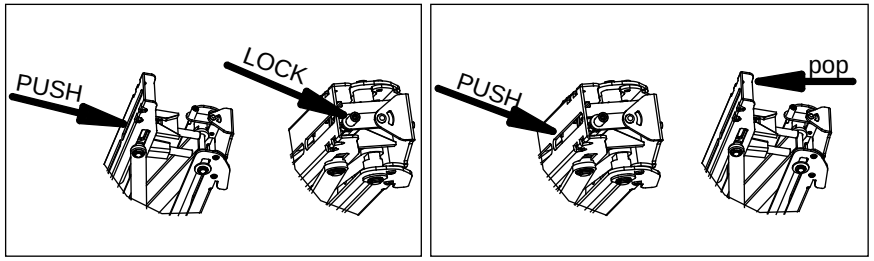

MAX:31.5"[800mm]
MIN:3.5"[88.9mm]

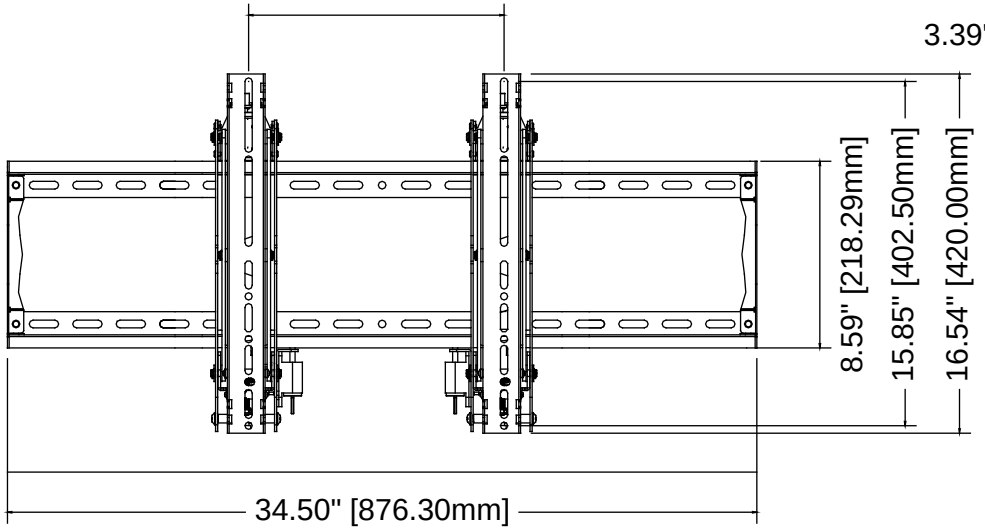

3.39" [86.06mm]

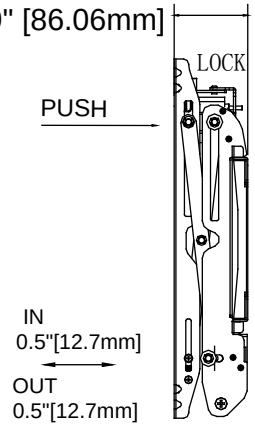

10.69" [271.49mm]

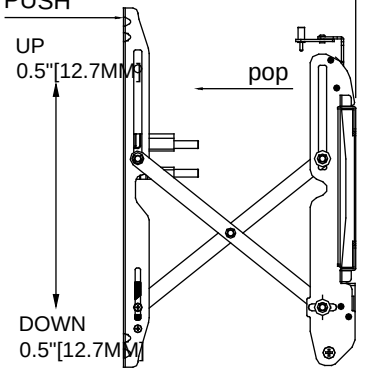

THE INFORMATION CONTAINED IN THIS DRAWING IS THE SOLE PROPERTY OF CRIMSON AV LLC. ANY REPRODUCTION IN PART OR AS A WHOLE WITHOUT THE WRITTEN PERMISSION OF CRIMSON AV LLC IS PROHIBITED

CRIMSON AV MOUNTING SOLUTIONS

CRIMSON AV LLC.

PRODUCT ORDER NUMBER: **VW4600G2**
PHONE: **1-866-668-6888**

Scale=1:1

Crimson AV LLC.
www.crimsonav.com

TITLE: **VW4600G2**

SIZE B | DWG.N.O. **VW4600G2**