Maximum load rating: 200 lbs

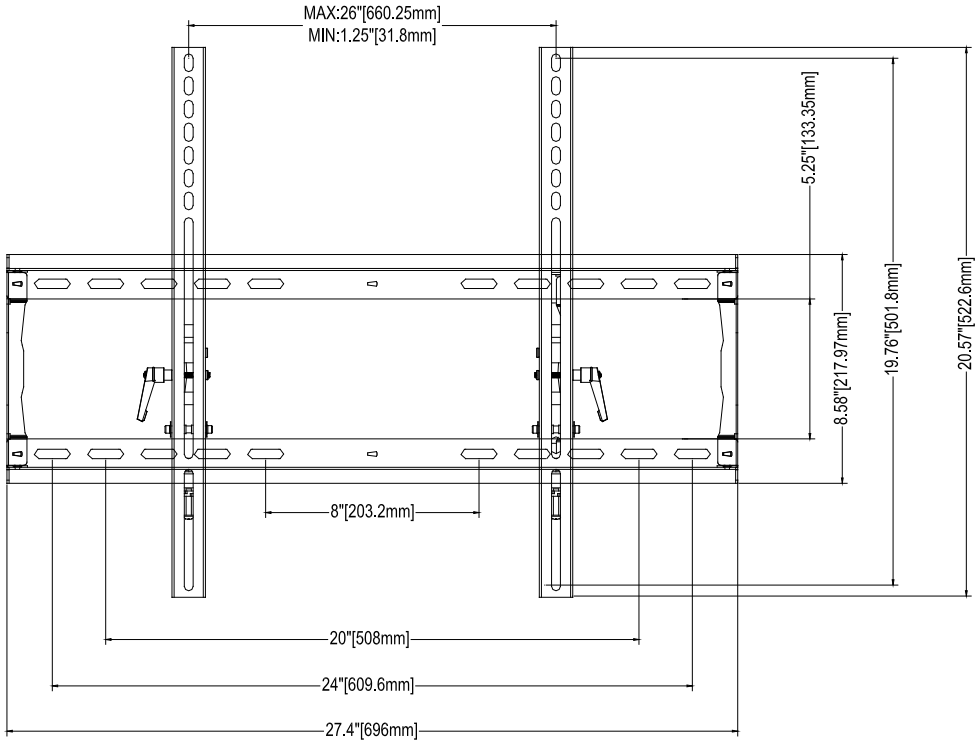

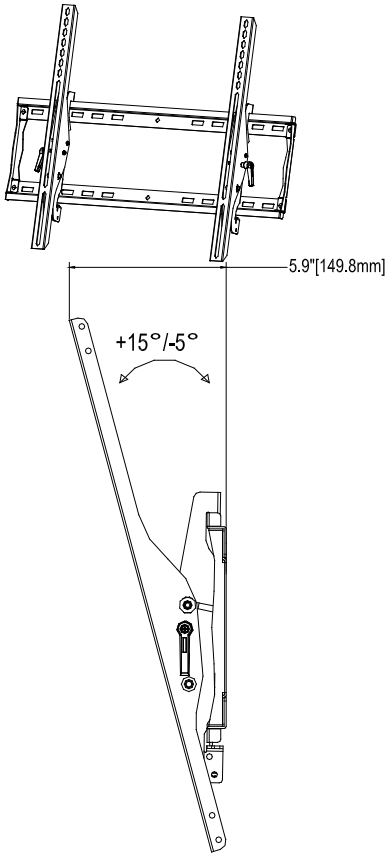

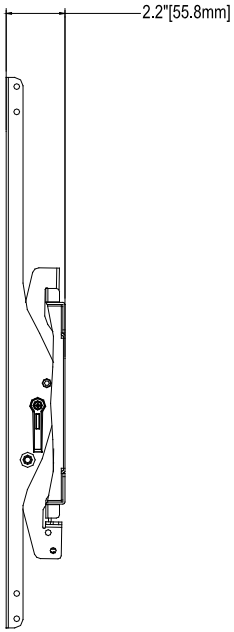

THE INFORMATION CONTAINED IN THIS DRAWING IS THE SOLE PROPERTY OF CRIMSON AV LLC. ANY REPRODUC TION IN PART OR AS A WHOLE WITHOUT THE WRITTEN PERMISSION OF CRIMSON AV LLC IS PROHIBITED

CRIMSON AV MOUNTING SOLUTIONS

CRIMSON AV LLC.

PRODUCT ORDER NUMBER: **T55**
PHONE: **1-866-668-6888**

Scale: 1:1

Crimson AV LLC. www.crimsonav.com	
TITLE: **T55**	
SIZE B	DWG.N.O. **T55**