PA2450L

Two-Channel Power Amplifier

Key Features:

- **2 x 450W at 4 Ohms**
- **2 U Rack Space Chassis**
- **Rear Level Controls**
- **Bridge Mode Operation Provides 1 x 900W at 8 Ohms**
- **Complete Protection Package**
- **Selectable 50Hz or 300Hz Hi-Pass Filter for each Channel**
- **Phoenix Type Inputs**
- **Phoenix Type Outputs**
- **High Efficiency Circuit Design**
- **Front Panel Power On/Off**

General Description:

The Electro-Voice® PA2450L is from the PA series of professional commercial audio amplifiers. The direct path airflow design reduces the heat buildup significantly and allows for more amplifier channels and output power in slim two rack space chassis. The audio performance of the PA2450L is superior and fulfills the requirements in many demanding long term applications from sound reinforcement, paging or life safety installations.

The PA2450L features many of the same comprehensive protection circuits typical in EV amplifiers. Complete protection is provided for high temperature, audio limiters, power up delay and peak current limiters. In addition to the rated output power, the PA2450L provides excellent headroom for a wide dynamic range on music signals. The onboard dynamic limiter ensures that the output clipping of the PA2450L will not will not generate excessive distortion. The amplifier channels can be bridged for more power flexibility.

Marked level controls on the rear panel provide hidden reliable level adjustments for each channel. Front panel LEDs indicate signal present, 0 dB, and limit. Phoenix type connectors for inputs and outputs provide an easy rack wiring.

Technical Specifications:

Number of Channels	2	
Load Impedance	8 Ohm	4 Ohm
Rated Output Power (*Rated Load) THD<1%, 1kHz	220W	450W
Rated Output Power (*Rated Load) THD<0.2%, 20Hz…20kHz	200W	400W
Slew Rate at 1kHz	28V/µs	
Frequency Response, -1dB, Ref. 1kHz	<10Hz - 40kHz	
Damping factor, at 100Hz / 1kHz, 4 Ohm	>250	
Power Bandwidth THD=1%, Ref. 1kHz, Half Power	>10Hz - >50kHz	
Input Impedance, 20Hz ... 20kHz, Balanced	>20kOhm	
Signal-to-Noise Ratio, A-Weighted	104 dB	
Input Sensitivity at Rated Output Power or Voltage, 1kHz	0dBu (775mV)	
THD at rated output power, MBW=80kHz, 1kHz	<0.1%	
IMD-SMPTE, 60Hz, 7kHz	<0.1%	
DIM30, 3.15kHz, 15kHz	<0.1%	
Crosstalk, Ref. 1kHz, at 10% Rated Output Power	<-75 dB	
Power Requirements	120V or 230V, 50Hz - 60Hz	
Protection	Audio Limiters High Temperature Peak Current Limiters Turn-On Delay	
Cooling	Front-to-Rear	
Dimensions (W x H x D), mm	483 x 88 x 406mm (2Ru) 19" x 3.5" x 16"	
Weight	16.5kg (36.34lbs)	

Low Impedance Outputs:
- Min. Rated Load for Single Channel Operation is 4 Ohms. 2 Ohm Load is Not Recommended.
- Min. Rated Load for Bridged Operation is 8 Ohms. 4 Ohm Load is Not Recommended.

Block Diagram:

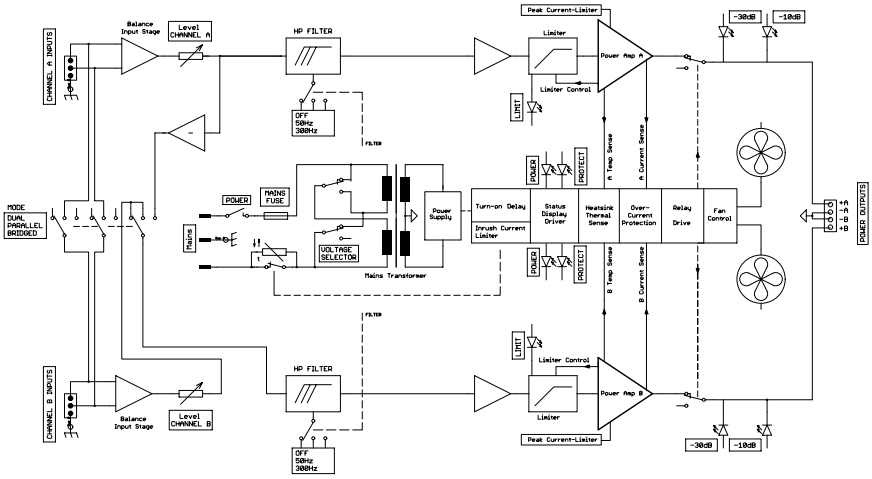

Dimension Drawings:

All Dimensions in Millimeters

Top View

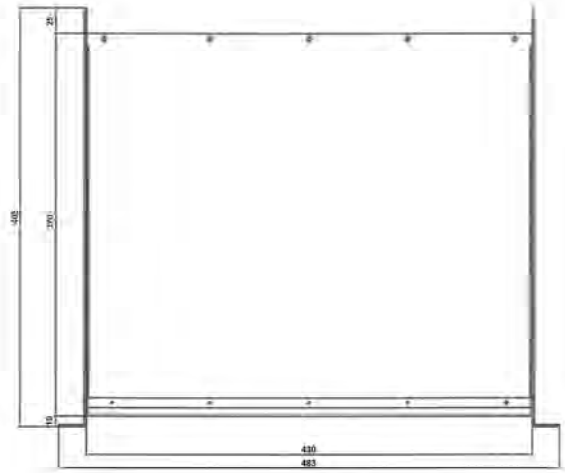

Front View

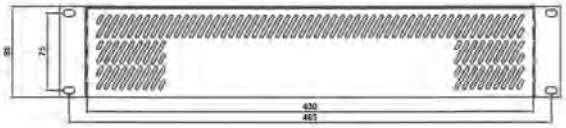

PA2450L Part Number:
PA2450L, 120V -- D170408

Rear View:

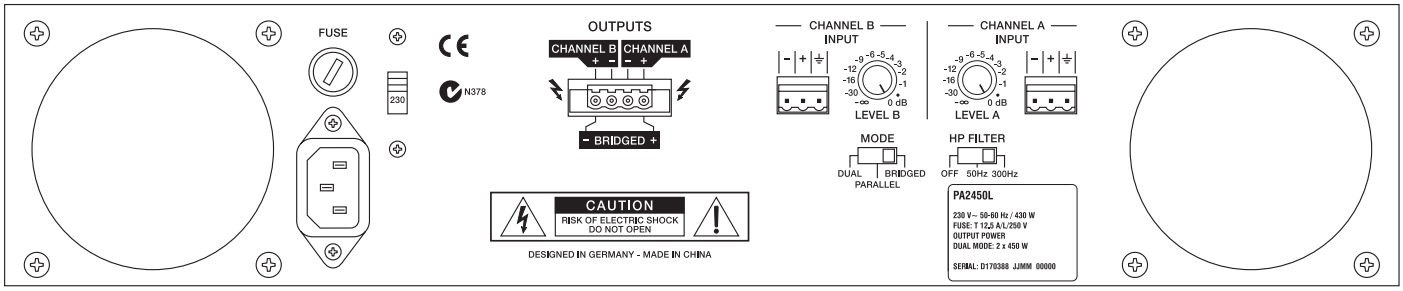

Electro-Voice®
12000 Portland Avenue South, Burnsville, MN 55337
Phone:952/884-4051, Fax:952/884-0043
www.electrovoice.com

© Telex Communications, Inc. 1/2006

Part Number LIT-0000XX Rev 1

U.S.A. and Canada only. For customer orders, contact Customer Service at:
800/392-3497 Fax: 800/955-6831
Europe, Africa, and Middle East only. For customer orders, contact Customer Service at:
+ 49 9421-706 0 Fax: + 49 9421-706 265
Other International locations. For customer orders, contact Customer Service at:
+ 1 952 884-4051 Fax: + 1 952 736-4212
For warranty repair or service information, contact the Service Repair department at:
800/685-2606
For technical assistance, contact Technical Support at: **866/78AUDIO**

Specifications subject to change without notice.